Chapter 5: Signal Encoding Techniques

Encoding Techniques

- Digital data, digital signal
- Analog data, digital signal
- Digital data, analog signal
- Analog data, analog signal

Digital Data, Digital Signal

- Digital signal
  - Discrete, discontinuous voltage pulses
  - Each pulse is a signal element
  - Binary data encoded into signal elements

Terms (1)

- Unipolar
  - All signal elements have same sign
- Polar
  - One logic state represented by positive voltage the other by negative voltage
- Data rate
  - Rate of data transmission in bits per second
- Duration or length of a bit
  - Time taken for transmitter to emit the bit

Terms (2)

- Modulation rate
  - Rate at which the signal level changes
  - Measured in baud = signal elements per second
- Mark and Space
  - Binary 1 and Binary 0 respectively

Data Transmission Terms

Term	Units	Definition
Data element	Bits	A single binary one or zero
Data rate	Bits per second (bps)	The rate at which data elements are transmitted
Signal element	Digital: a voltage pulse of constant amplitude Analog: a pulse of constant frequency, phase, and amplitude	That part of a signal that occupies the shortest interval of a signaling code
Signaling rate or modulation rate	Signal elements per second (baud)	The rate at which signal elements are transmitted

Interpreting Signals

- Need to know
  - Timing of bits - when they start and end
  - Signal levels
- Factors affecting successful interpreting of signals
  - Signal to noise ratio
  - Data rate
  - Bandwidth
  - Synchronization

Comparison of Encoding Schemes (1)

- Signal Spectrum
  - Lack of high frequencies reduces required bandwidth
  - Lack of DC component allows AC coupling via transformer, providing isolation
  - Concentrate power in the middle of the bandwidth

- Clocking
  - Synchronizing transmitter and receiver
  - External clock
  - Sync mechanism based on signal

Comparison of Encoding Schemes (2)

- Error detection
  - Can be built in to signal encoding
- Signal interference and noise immunity
  - Some codes are better than others
- Cost and complexity
  - Higher signal rate (& thus data rate) lead to higher costs
  - Some codes require signal rate greater than data rate

Encoding Schemes

- Nonreturn to Zero-Level (NRZ-L)
- Nonreturn to Zero Inverted (NRZI)
- Bipolar -AMI
- Pseudoternary
- Manchester
- Differential Manchester
- B8ZS
- HDB3

Definition of Digital Signal Encoding Formats

Nonreturn to Zero-Level (NRZ-L)
0 = high level
1 = low level

Nonreturn to Zero Inverted (NRZI)
0 = no transition at beginning of interval (one bit time)
1 = transition at beginning of interval

Bipolar-AMI
0 = no line signal
1 = positive or negative level, alternating for successive ones

Pseudoternary
0 = positive or negative level, alternating for successive zeros
1 = no line signal

Manchester
0 = transition from high to low in middle of interval
1 = transition from low to high in middle of interval

Differential Manchester
Always a transition in middle of interval
0 = transition at beginning of interval
1 = no transition at beginning of interval

B8ZS
Same as bipolar AMI, except that any string of eight zeros is replaced by a string with two code violations

HDB3
Same as bipolar AMI, except that any string of four zeros is replaced by a string with one code violation

Nonreturn to Zero-Level (NRZ-L)

- Two different voltages for 0 and 1 bits
- Voltage constant during bit interval
  - no transition, i.e. no return to zero voltage
  - in general, absence of voltage for "0, constant positive voltage for 1
  - More often, negative voltage for “1” value and positive for the “0”
  - This is NRZ-L

Nonreturn to Zero Inverted

- Nonreturn to zero inverted on <u>ones</u>
  - —Constant voltage pulse for duration of bit
  - —Data encoded as presence or absence of <u>signal transition</u> at beginning of bit time
  - —Transition denotes a binary 1
    - (low to high or high to low)
  - —No transition denotes binary 0
  - —An example of differential encoding

NRZ

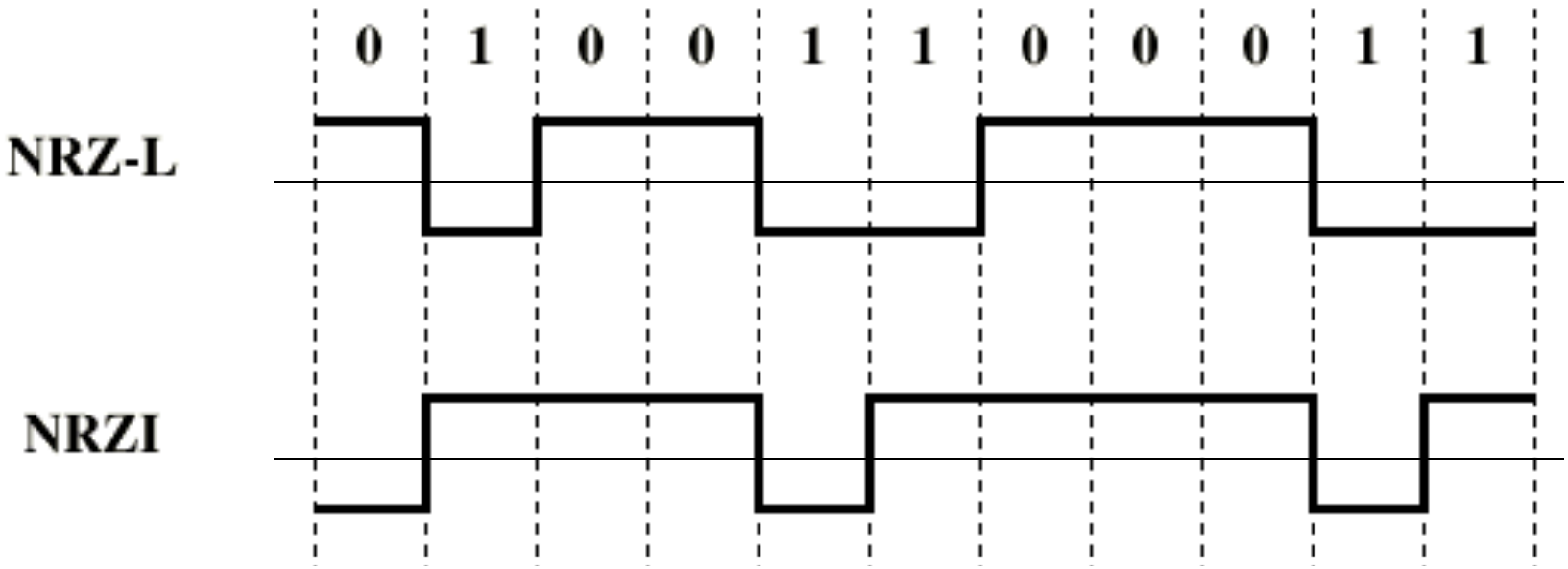

Differential Encoding

- Data represented by changes rather than levels
  - More reliable detection of transition rather than level
  - In complex transmission layouts it is easy to lose sense of polarity

NRZ pros and cons

- Pros
  - Easy to engineer
  - Make good use of bandwidth
- Cons
  - dc component
  - Lack of synchronization capability
- Used for magnetic recording
- Not often used for signal transmission

Multilevel Binary

- Use more than two levels
- **Bipolar-AMI**
  - “0” represented by no line signal
  - “1” represented by positive or negative pulse
  - “1” pulses alternate in polarity
  - No loss of sync if a long string of “1”s (“0” still a problem)
  - No net dc component
  - Lower bandwidth
  - Easy error detection

Pseudoternary

- “1” represented by absence of line signal
- “0” represented by alternating positive and negative
- No advantage or disadvantage over bipolar-AMI

Bipolar-AMI and Pseudoternary

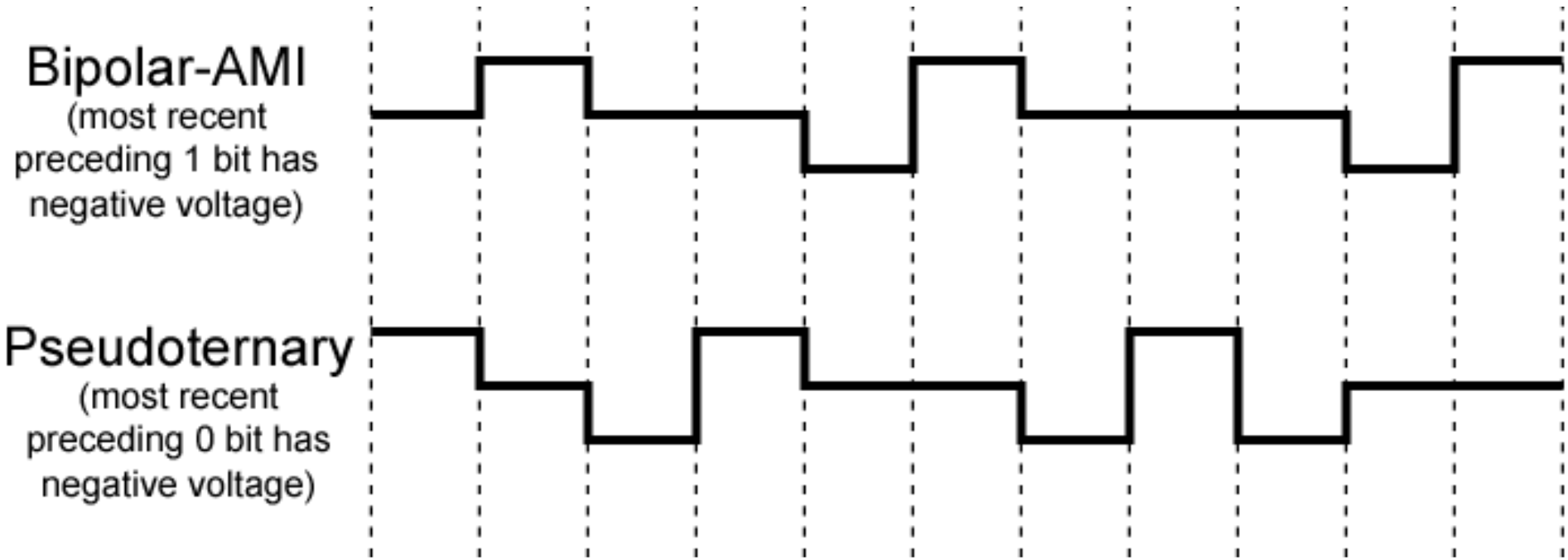

Trade-Off for Multilevel Binary

- Not as efficient as NRZ
  - Each signal element only represents one bit
  - 3 level system could represent $\log_2 3 = 1.58$ bits
  - Receiver must distinguish between three levels (+A, -A, 0)
  - Requires approx. 3dB more signal power for same probability of bit error

Manchester Encoding

- Transition in middle of each bit period
- Transition serves as clock and data
- Low to high represents one
- High to low represents zero
- Used by IEEE 802.3 (CSMA/CD, i.e. Ethernet)

Manchester Encoding

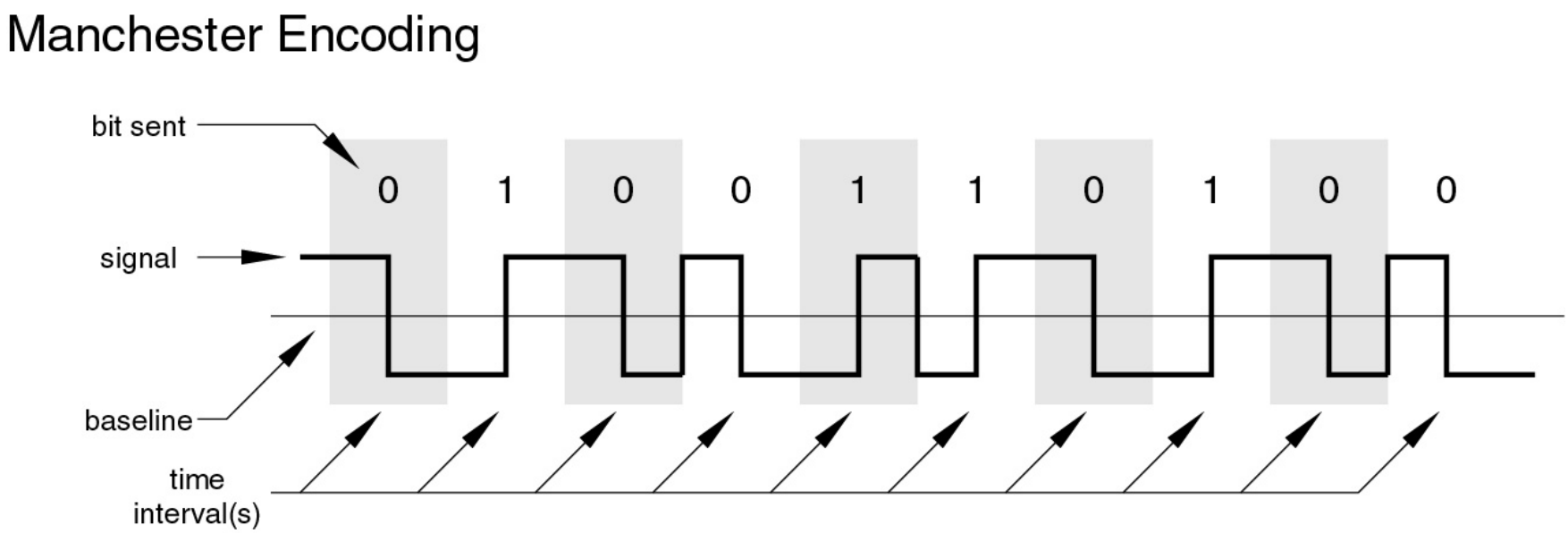

Differential Manchester

- Mid-bit transition is clocking only
- Transition at start of a bit period represents zero
- No transition at start of a bit period represents one
- Note: this is a differential encoding scheme
- Used by IEEE 802.5 (token ring)

Differential Manchester Encoding

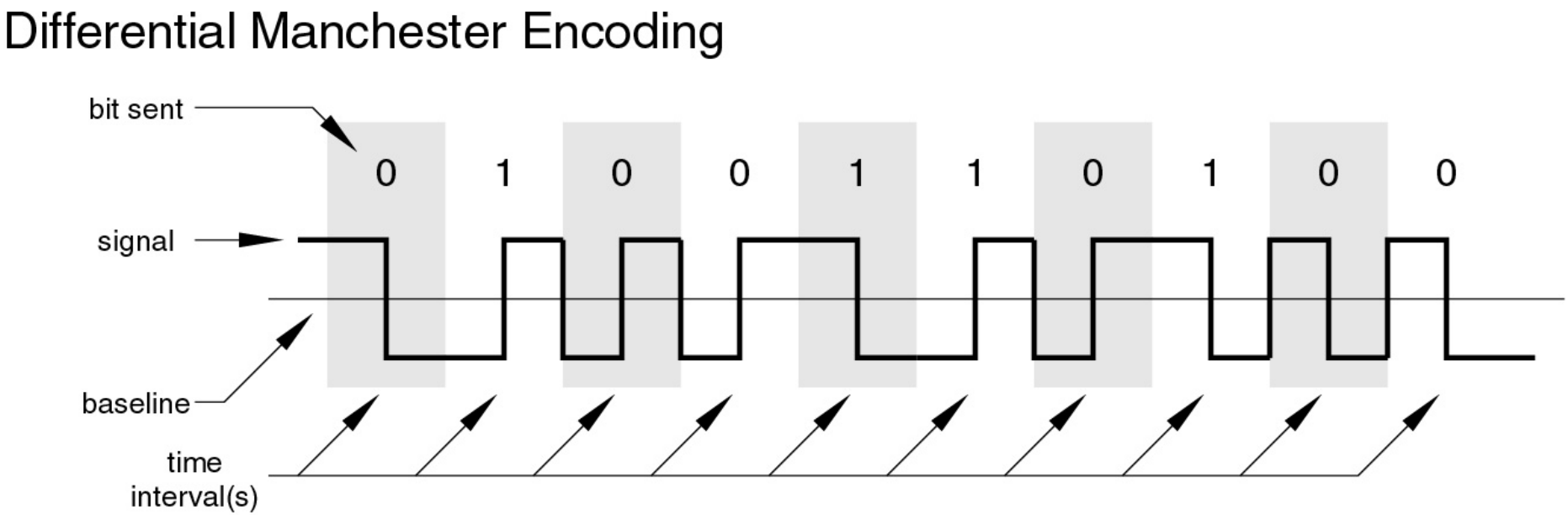

BTW: does anything seem wrong here?

Biphase Pros and Cons

Manchester and Diff. Manchester are called *Biphase*

- Con
  - At least one transition per bit time and possibly two
  - Maximum modulation rate is twice NRZ
  - Requires more bandwidth
- Pros
  - Synchronization on mid bit transition (self clocking)
  - No dc component
  - Error detection
    - Absence of expected transition

Modulation Rate

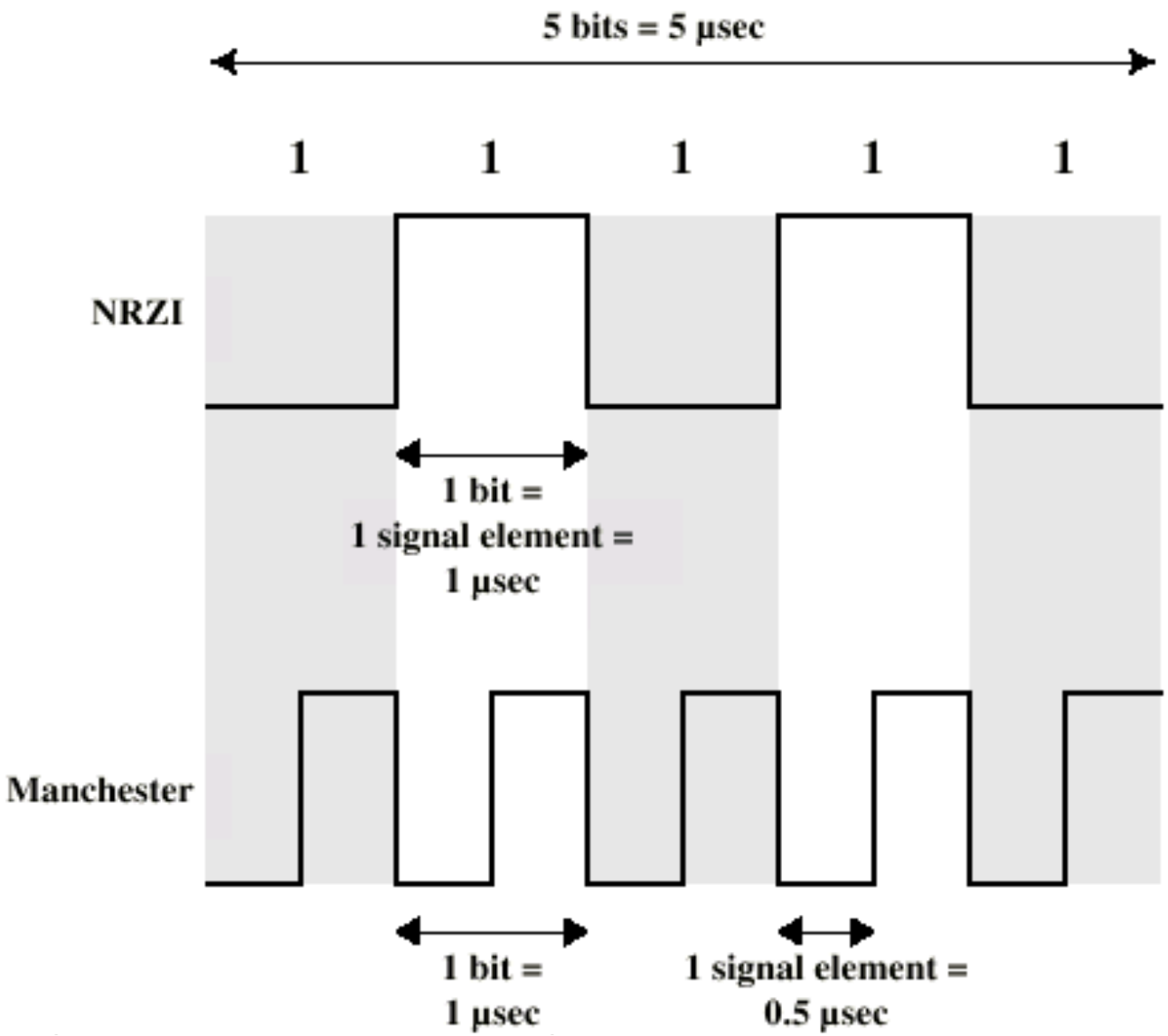

Scrambling

- Use scrambling to replace sequences that would produce constant voltage
- Filling sequence
  - Must produce enough transitions to sync
  - Must be recognized by receiver and replace with original
  - Same length as original
- No dc component
- No long sequences of zero level line signal
- No reduction in data rate
- Error detection capability

B8ZS

- Bipolar With 8 Zeros Substitution
- Based on bipolar-AMI
- If octet of all zeros and last voltage pulse preceding was positive encode as 000+-0-+
- If octet of all zeros and last voltage pulse preceding was negative encode as 000-+0+-
- Causes two violations of AMI code
- Unlikely to occur as a result of noise
- Receiver detects and interprets as octet of all zeros

Data Encoding

- HDB3 - (High Density Bipolar 3)
  - Commonly used in Europe and Japan
  - Similar to bipolar AMI, except that any string of four zeros is replaced by a string with one code violation
  - Rules:
    - replace every string of 4 zeros by 000V
      - V is a code violation
    - this might result in DC components if consecutive strings of 4 zeros are encoded -- in this case the pattern B00V is used
      - B is a level inversion and
      - V is the code violation
    - general rule: use patterns 000V and B00V such that the violations alternate, thereby avoiding DC components

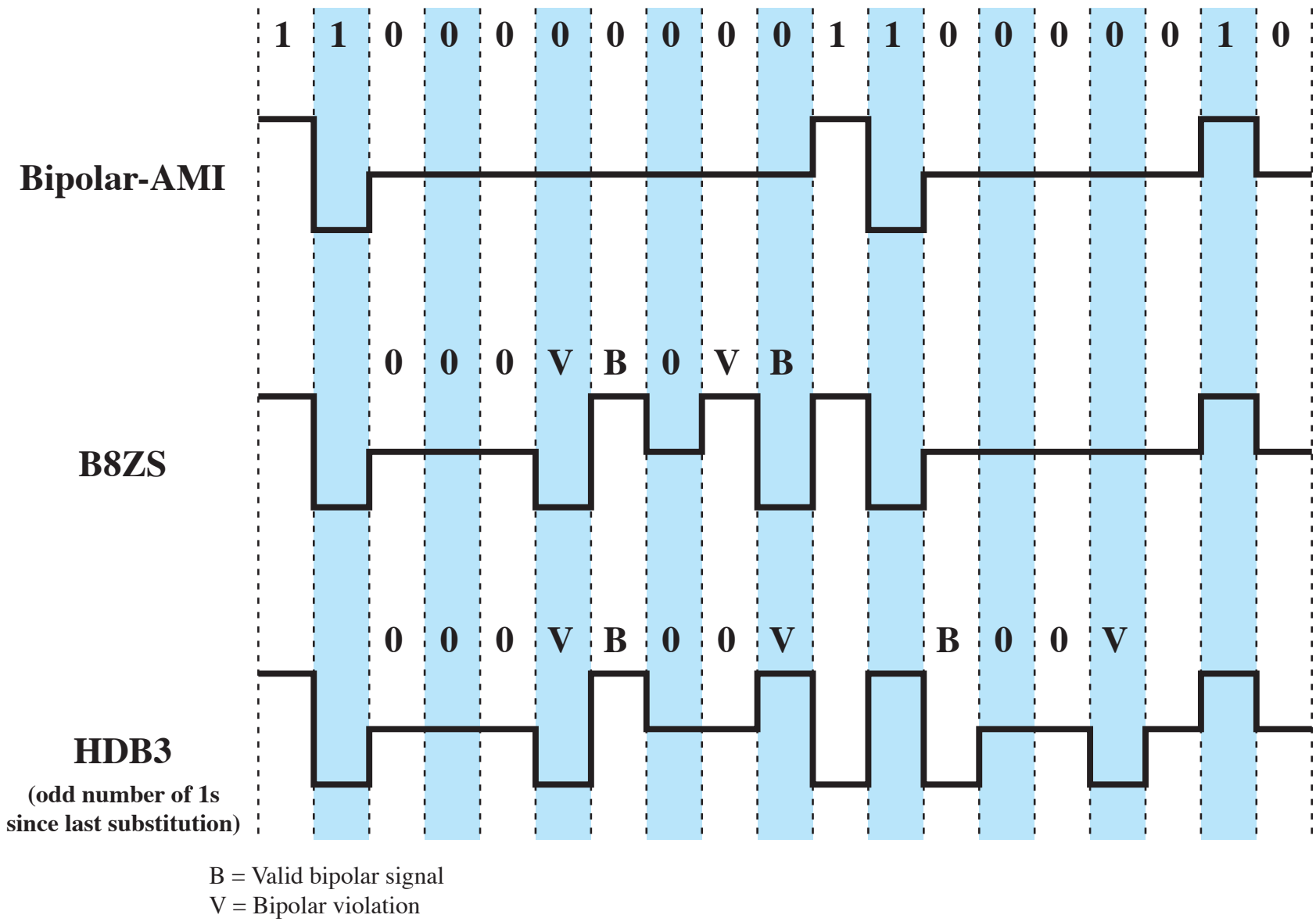

Figure 5.6 Encoding Rules for B8ZS and HDB3

Test your understanding and see solutions on next slide

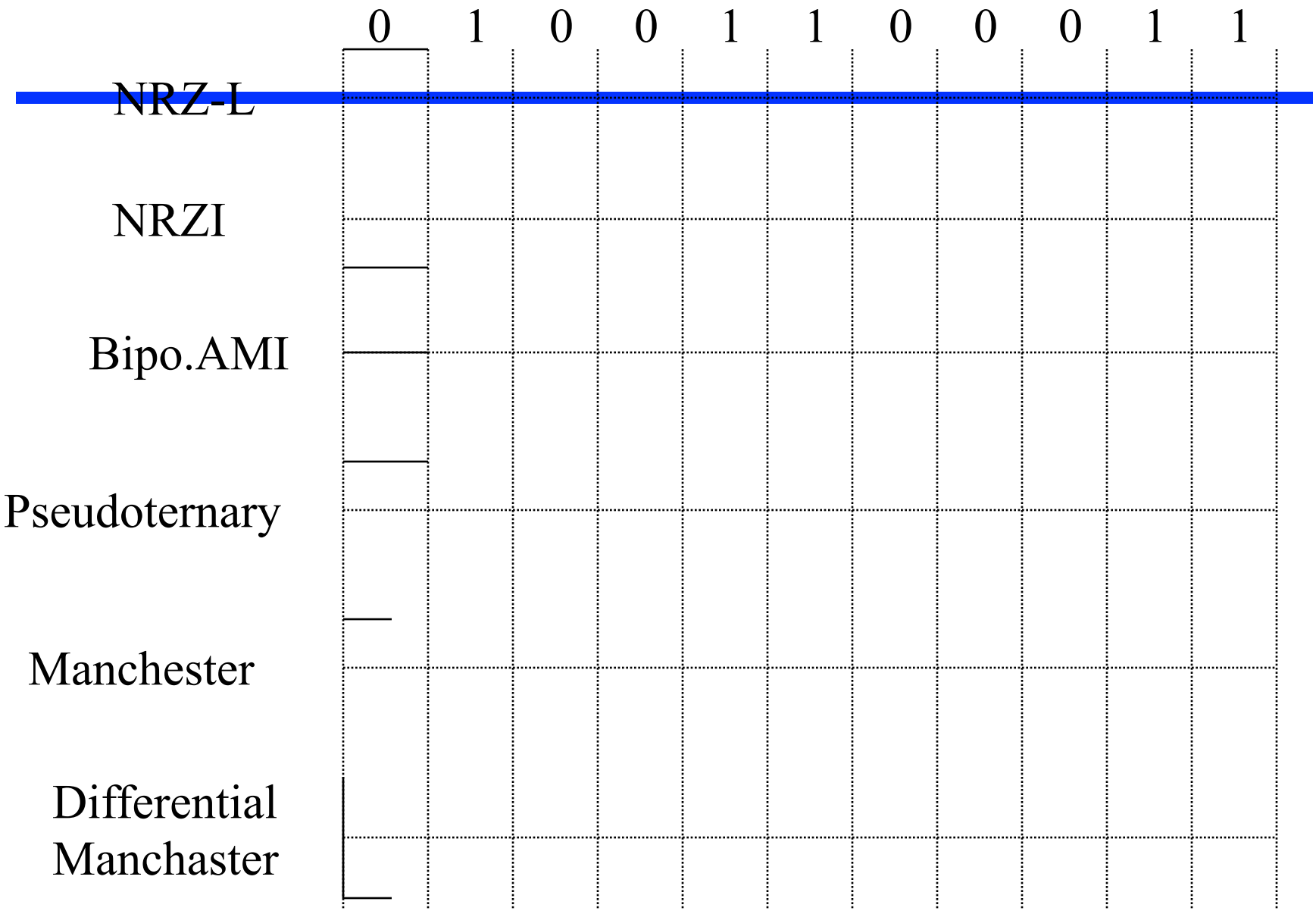

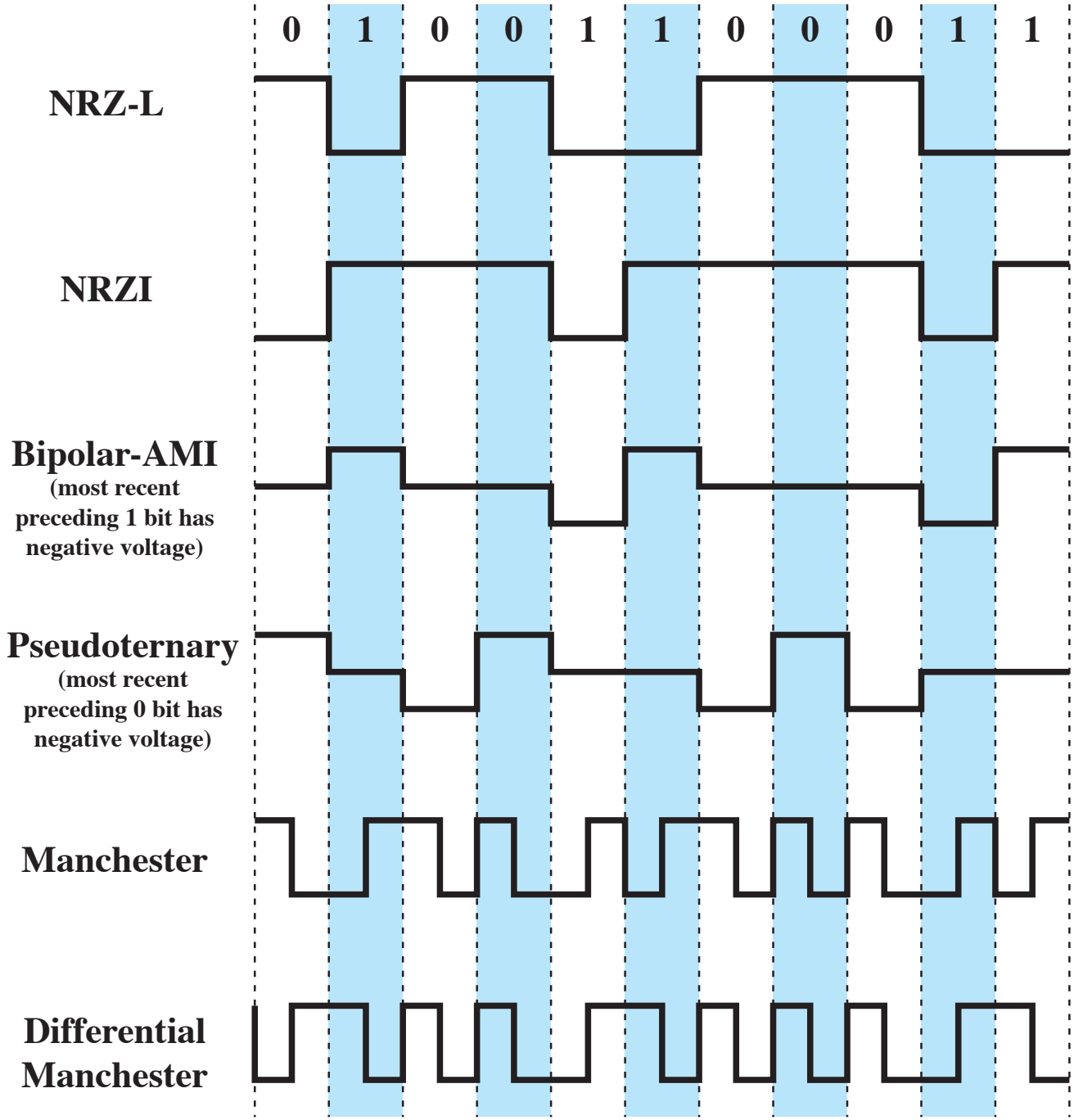
0 1 0 0 1 1 0 0 0 1 1
NRZ-L
NRZI
Bipolar-AMI
(most recent preceding 1 bit has negative voltage)
Pseudoternary
(most recent preceding 0 bit has negative voltage)
Manchester
Differential Manchester

Test your understanding and see solutions on next slide

1 1 0 0 0 0 0 0 0 0 1 1 0 0 0 0 0 1 0

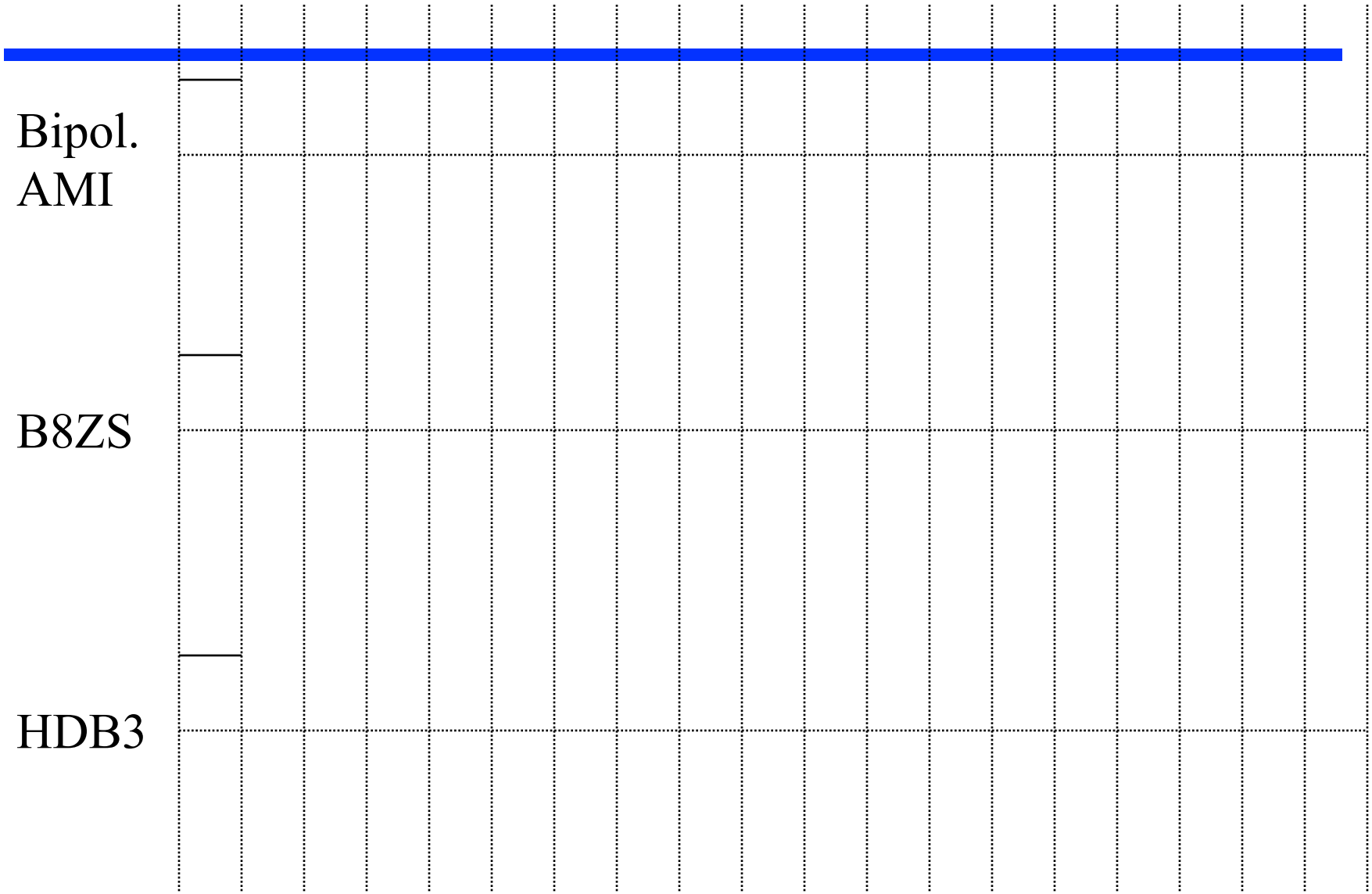

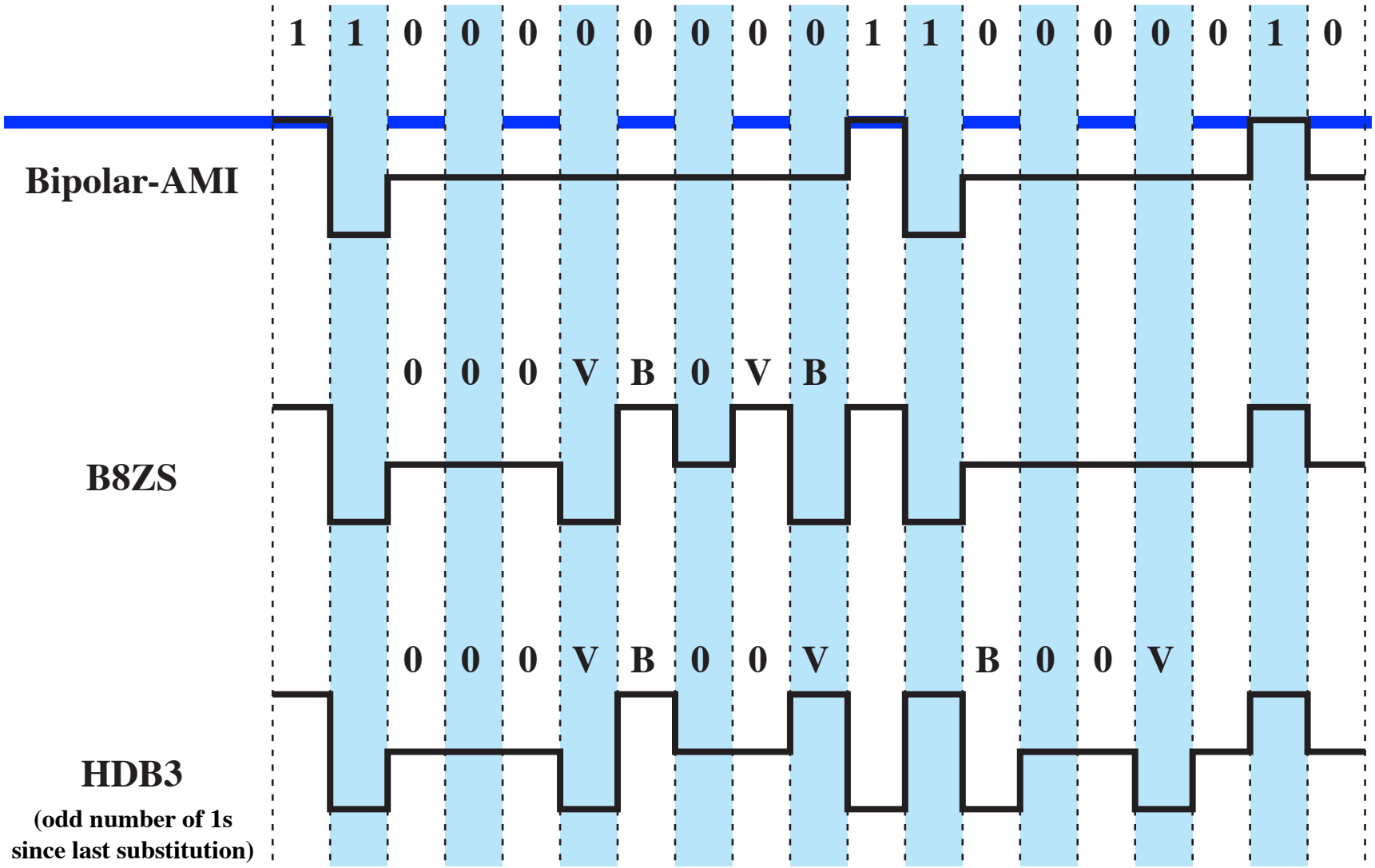

B = Valid bipolar signal
V = Bipolar violation

Digital Data, Analog Signal

- Public telephone system
  - 300Hz to 3400Hz
  - Use modem (modulator-demodulator)
- Amplitude shift keying (ASK)
- Frequency shift keying (FSK)
- Phase shift keying (PSK)

Amplitude Shift Keying

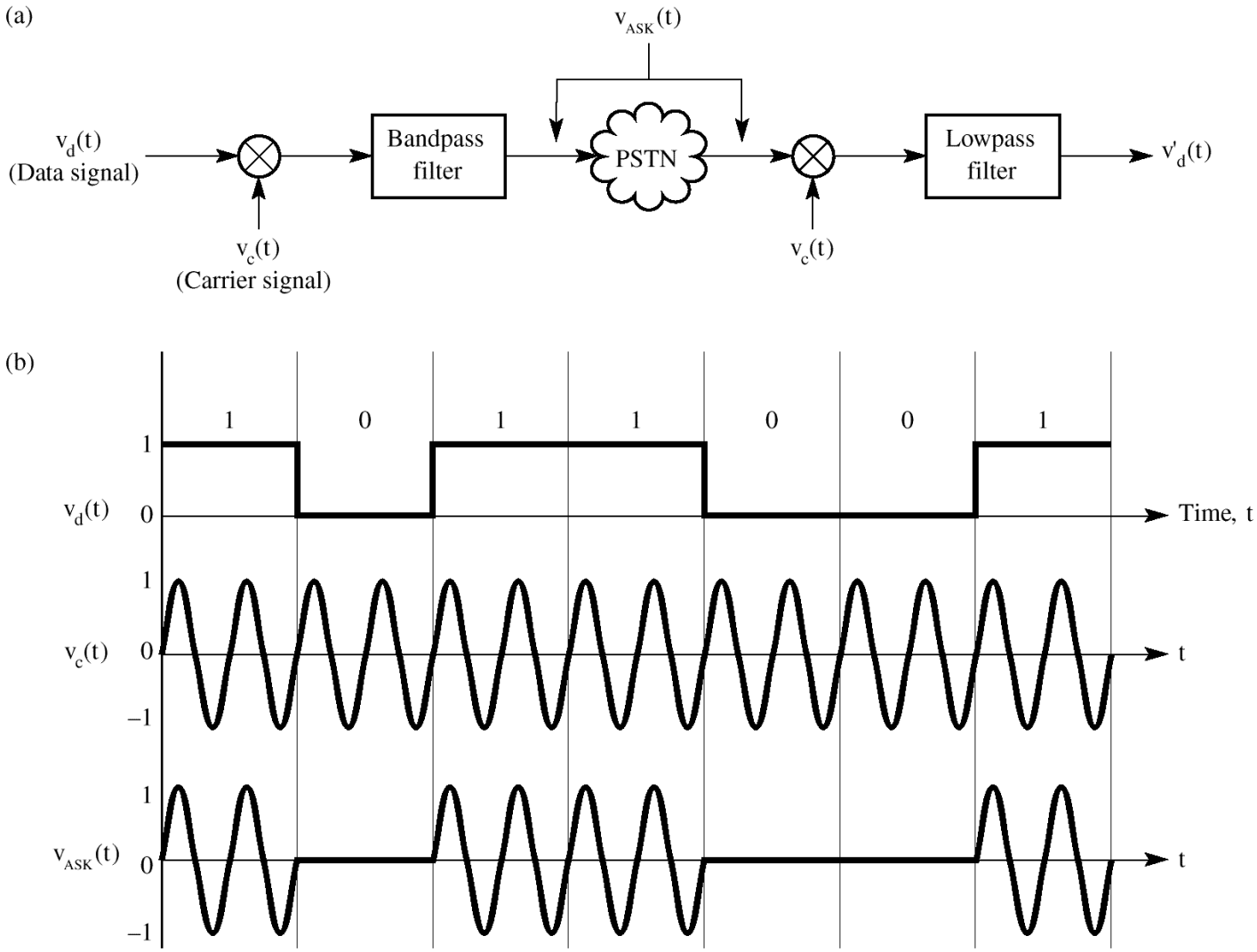

Hal96 fig 2.18

Amplitude Shift Keying

- Amplitude Modulation
  - carrier frequency
  - signal to be modulated
  - spectrum

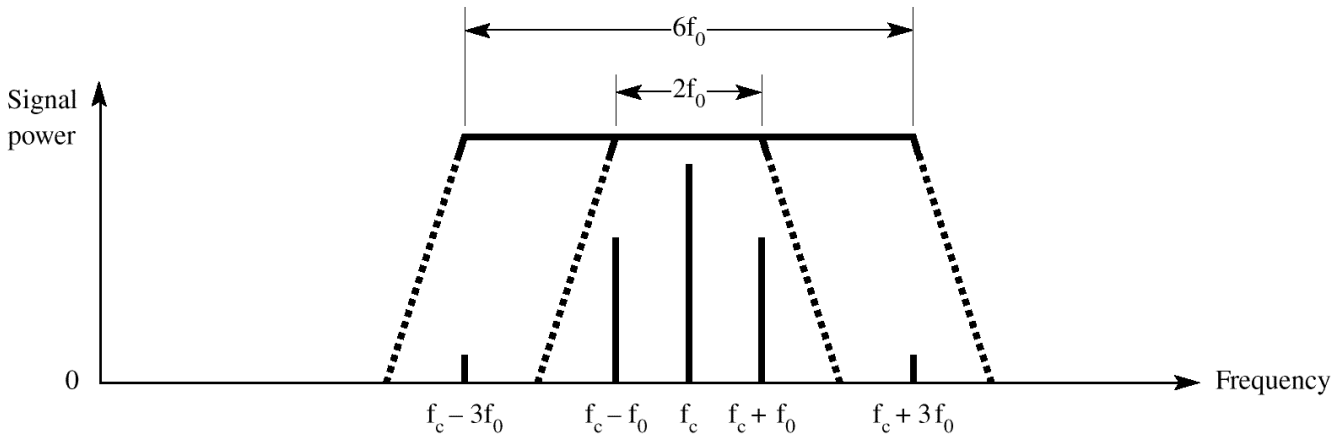

f_0 = Fundamental frequency component = 1/2 bit rate (Hz)

Hal96 fig 2.18

How does ASK work?

$$v_c(t) = \cos\omega_c t$$

$$v_d(t) = \frac{1}{2} + \frac{2}{\pi}\{\cos\omega_0 t - \frac{1}{3}\cos 3\omega_0 t + \frac{1}{5}\cos 5\omega_0 t - \ldots\}$$

$$v_{ASK}(t) = v_c(t)\cdot v_d(t)$$

$$= \frac{1}{2}\cos\omega_c t + \frac{2}{\pi}\{\cos\omega_c t\cdot\cos\omega_0 t - \frac{1}{3}\cos\omega_c t\cdot\cos 3\omega_0 t + \ldots\}$$

Now, we know that

$$2\cos A\cos B = \cos(A-B) + \cos(A+B)$$

Therefore we have:

$$v_{ASK}(t) = \frac{1}{2}\cos\omega_c t$$

$$+\frac{1}{\pi}\{\cos(\omega_c - \omega_0)t + \cos(\omega_c + \omega_0)t$$

$$-\frac{1}{3}[\cos(\omega_c - 3\omega_0)t + \cos(\omega_c + 3\omega_0)t] + \ldots\}$$

Frequency Shift Keying

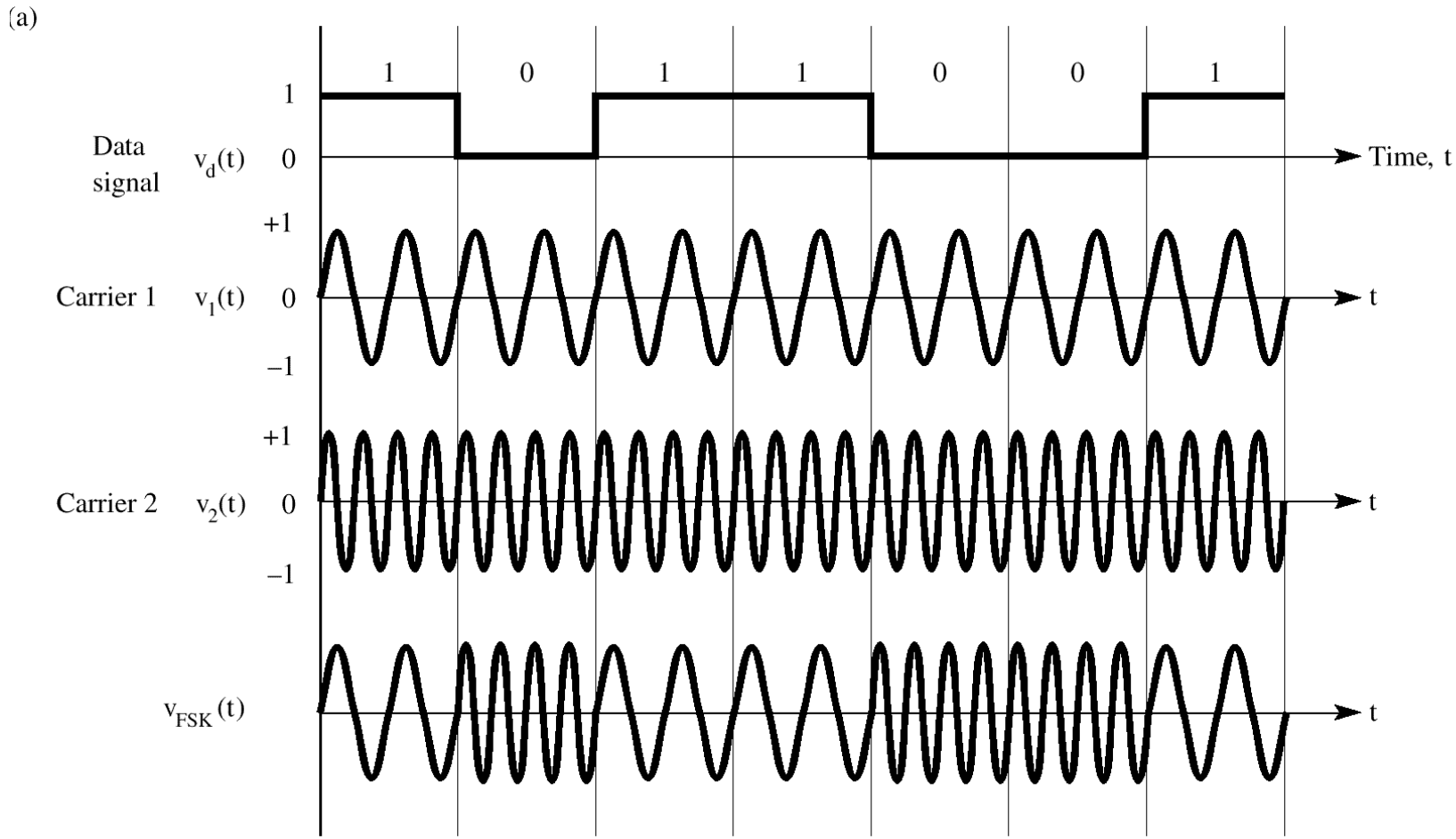

Hal96 fig 2.19

Frequency Shift Keying

- Frequency Modulation
  - different carrier frequencies
  - signal to be modulated
  - spectrur

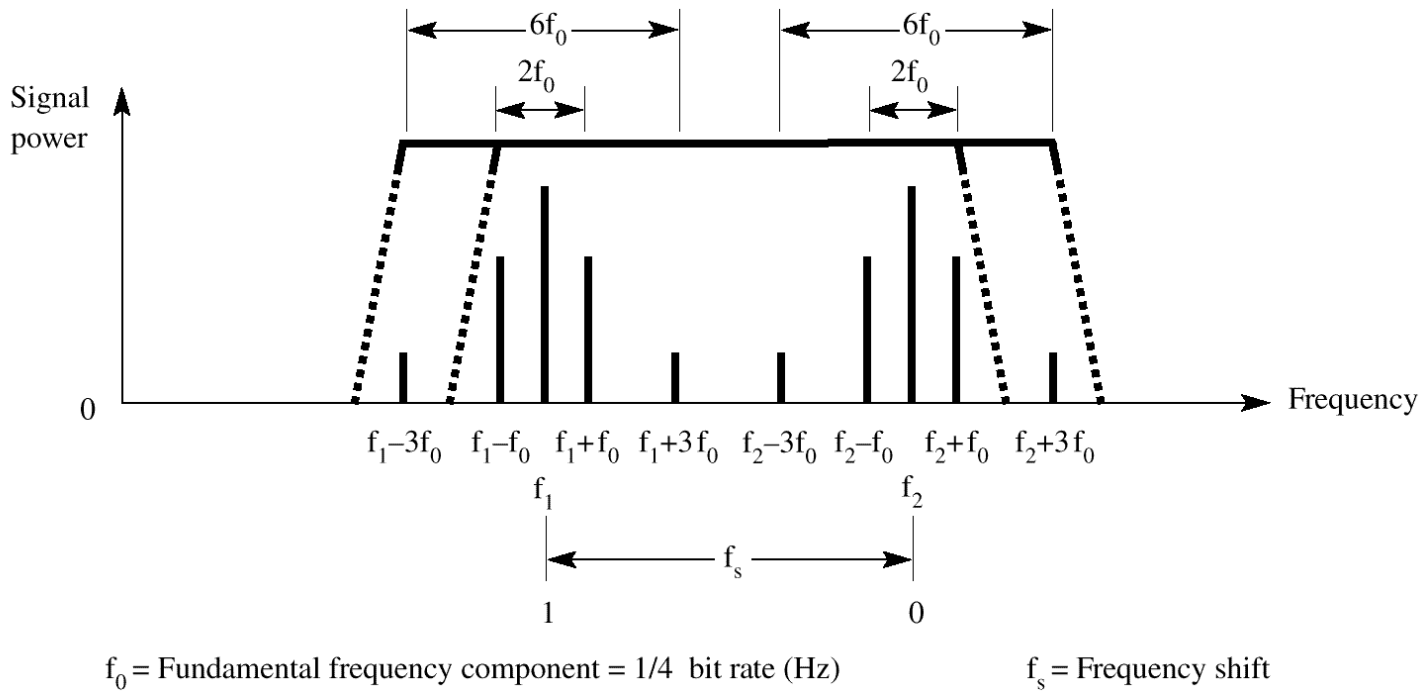

Hal96 fig 2.19

How does FSK work?

$$v_{FSK}(t) = \cos\omega_1 t \cdot v_d(t) + \cos\omega_2 t \cdot v_{d'}(t)$$

The two carriers are ω_1 and ω_2 and $v_{d'}(t) = 1 - v_d(t)$

$$v_{FSK}(t) = \cos\omega_1 t\{\frac{1}{2} + \frac{2}{\pi}(\cos\omega_0 t - \frac{1}{3}\cos 3\omega_0 t + \ldots)\}$$
$$+ \cos\omega_2 t\{\frac{1}{2} - \frac{2}{\pi}(\cos\omega_0 t - \frac{1}{3}\cos 3\omega_0 t + \ldots)\}$$

Therefore we have:

$$v_{FSK}(t) = \frac{1}{2}\cos\omega_1 t + \frac{1}{\pi}\{\cos(\omega_1 - \omega_0)t + \cos(\omega_1 + \omega_0)t$$
$$-\frac{1}{3}\cos(\omega_1 - 3\omega_0)t + \cos(\omega_1 + 3\omega_0)t + \ldots\}$$
$$+\frac{1}{2}\cos\omega_2 t + \frac{1}{\pi}\{\cos(\omega_2 - \omega_0)t + \cos(\omega_2 + \omega_0)t$$
$$-\frac{1}{3}\cos(\omega_2 - 3\omega_0)t + \cos(\omega_2 + 3\omega_0)t + \ldots\}$$

Phase Shift Keying

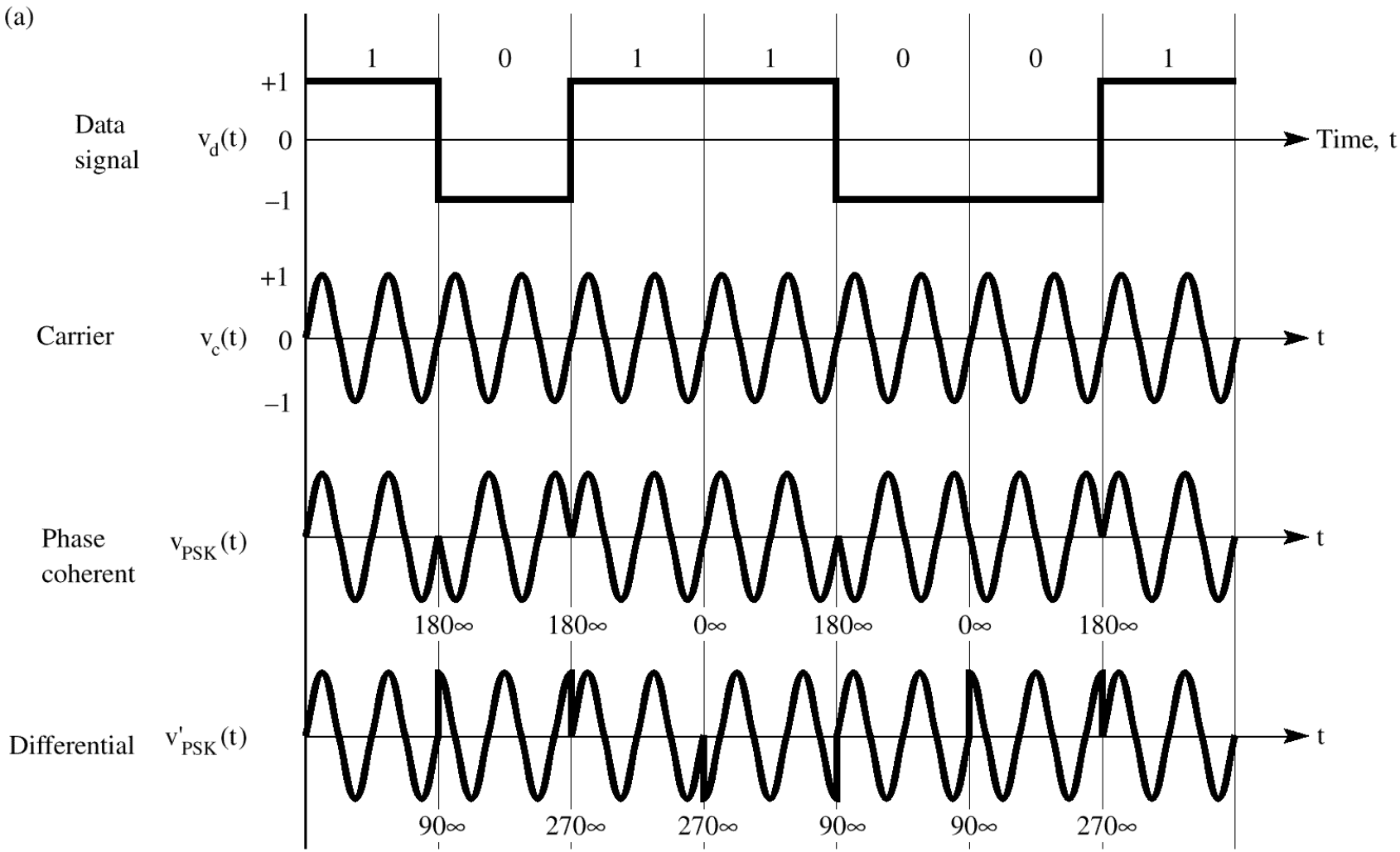

Hal96 fig 2.21

Phase Shift Keying

- Phase Modulation
  - —phase of carrier defines data
  - —two versions
    - phase coherent
    - differential
  - —spectrum

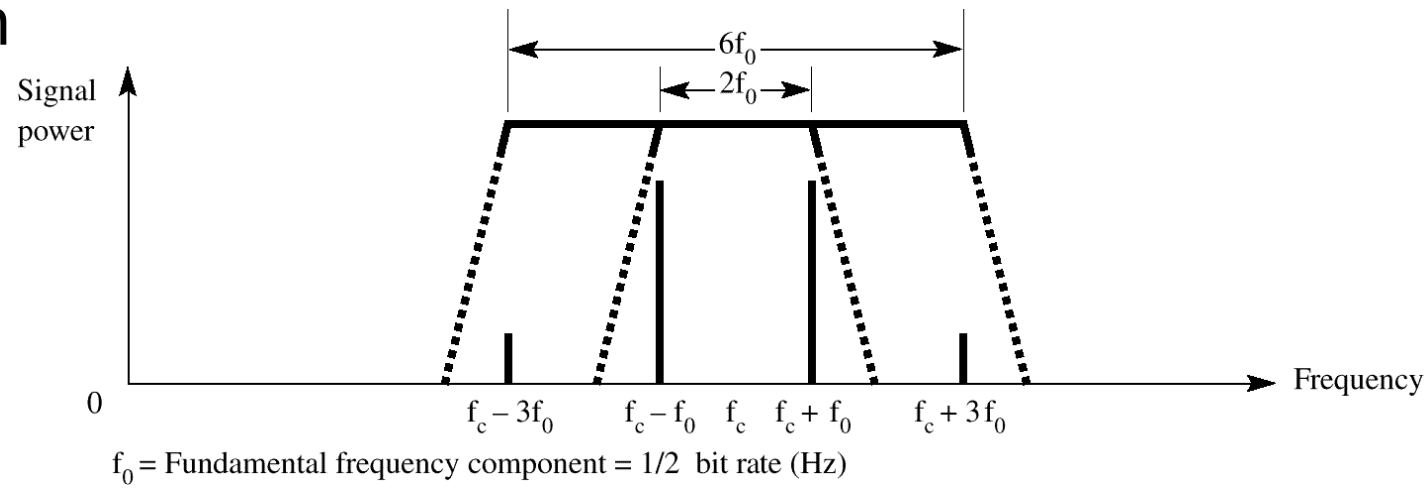

Hal96 fig 2.21

How does PSK work?

Carrier and bipolar data signal

$$v_c(t) = \cos\omega_c t$$

$$v_d(t) = \frac{4}{\pi}\{\cos\omega_0 t - \frac{1}{3}\cos 3\omega_0 t + \frac{1}{5}\cos 5\omega_0 t - \ldots\}$$

$$v_{PSK}(t) = v_c(t)\cdot v_d(t)$$

$$= \frac{4}{\pi}\{\cos\omega_c t\cdot\cos\omega_0 t - \frac{1}{3}\cos\omega_c t\cdot\cos 3\omega_0 t + \ldots\}$$

With the usual simplification $2\cos A\cos B = \cos(A-B)+\cos(A+B)$ we get:

$$v_{PSK}(t) = \frac{2}{\pi}\{\cos(\omega_c-\omega_0)t + \cos(\omega_c+\omega_0)t$$

$$-\frac{1}{3}\cos(\omega_c-3\omega_0)t + \cos(\omega_c+3\omega_0)t + \ldots\}$$

Phase Shift Keying

- Multilevel Phase Modulation Methods
  - —use multiple phases
  - —e.g. 4-PSK or quadrature phase shift keying QPSK
    - (0°,90°,180°,270°)
  - —4-PSK phase-time diagram

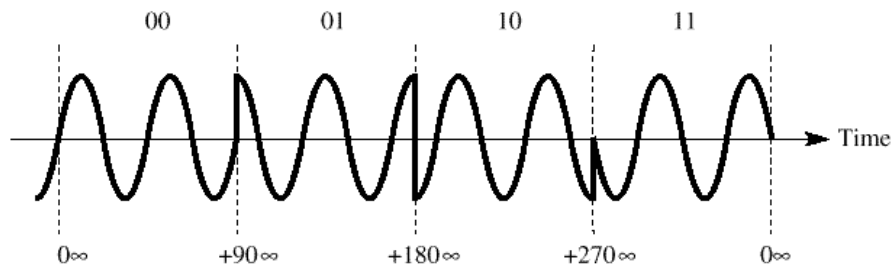

  - —4-PSK phase diagram

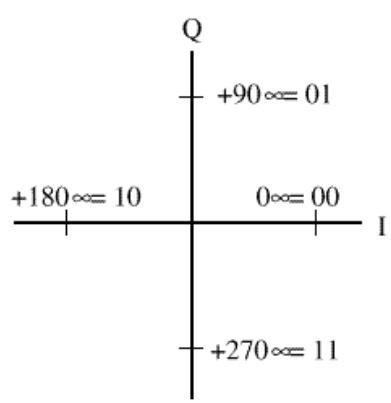

  - —16-QAM phase diagram

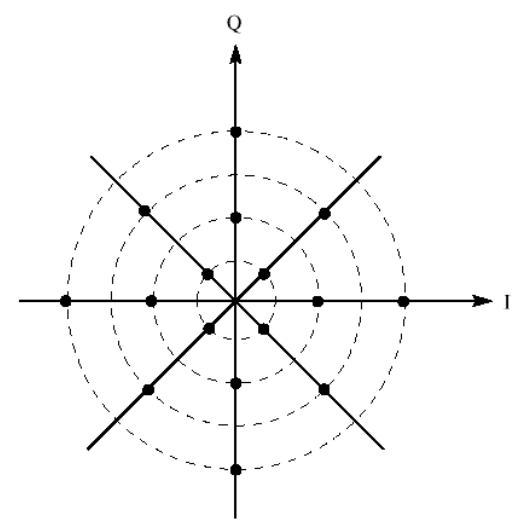

Spread Spectrum

- Spread spectrum digital communication systems
  - developed initially for military
    - spread the signal to make it hard to jam
    - became known as “frequency-hopping”
    - switches through a pseudo random sequence of frequency assignments

Data Signaling

- Transmitting on Analog Lines
  - If we use existing telephone lines (PSTN) we have to consider that they were created for voice with effective bandwidth from 300Hz to 3400Hz or total of 3000Hz.
  - We have to concern ourselves with two forms of data.
    - Analog data
    - Digital data

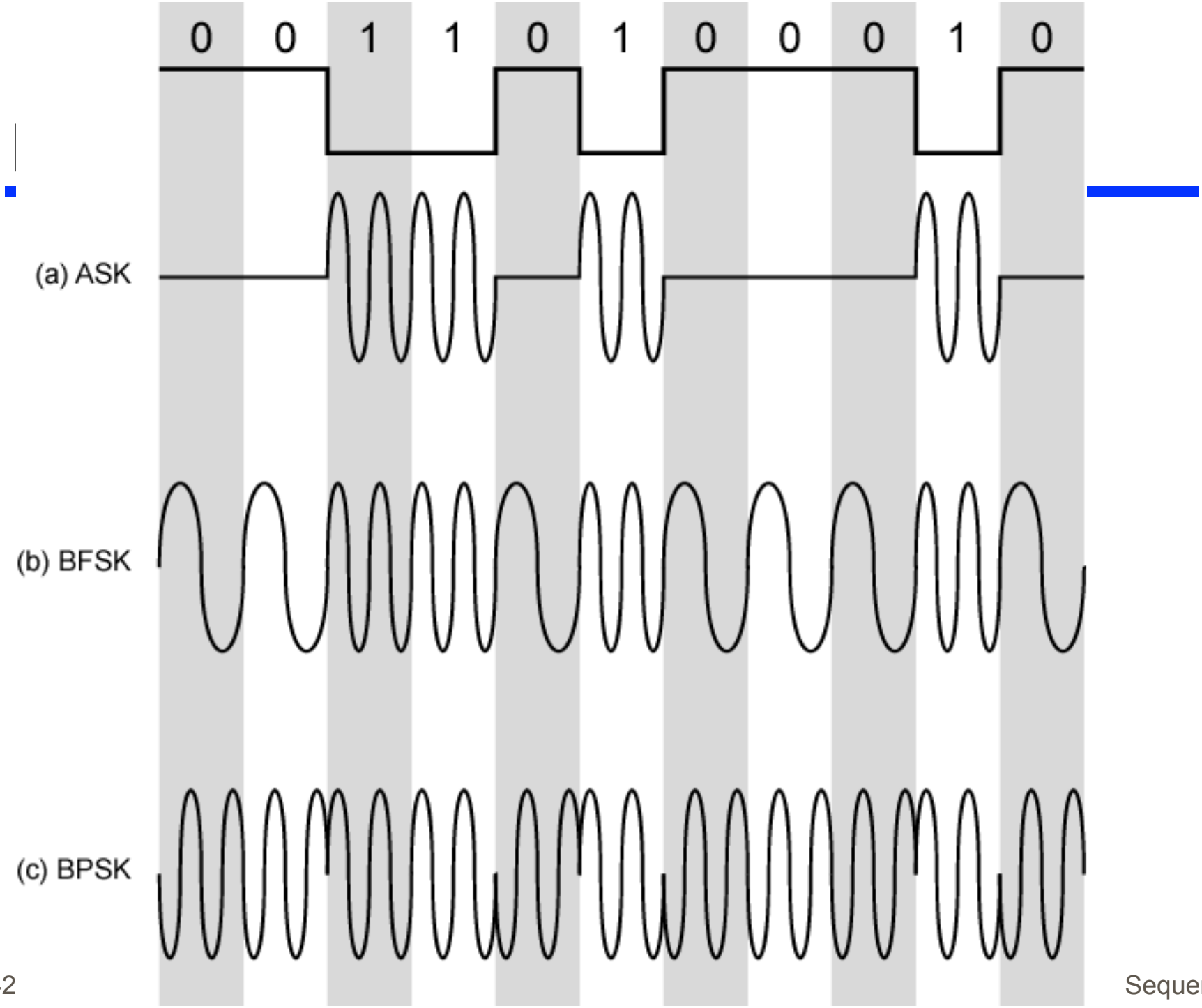
0 0 1 1 0 1 0 0 0 1 0
(a) ASK
(b) BFSK
(c) BPSK

Amplitude Shift Keying

- Values represented by different amplitudes of carrier
- Usually, one amplitude is zero
  - i.e. presence and absence of carrier is used
- Susceptible to sudden gain changes
- Inefficient
- Up to 1200bps on voice grade lines
- Used over optical fiber

Binary Frequency Shift Keying

- Most common form FSK is binary FSK (BFSK)
- Two binary values represented by two different frequencies (near carrier)
- Less susceptible to error than ASK
- Up to 1200bps on voice grade lines
- High frequency radio

Multiple FSK

- More than two frequencies used
- More bandwidth efficient
- More prone to error
- Each signalling element represents more than one bit

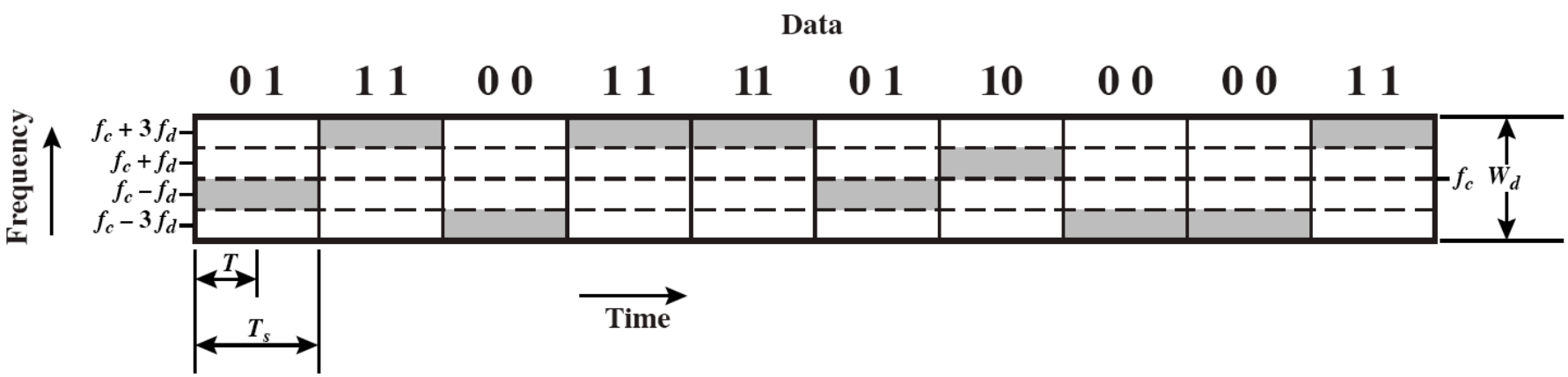

Figure 5.9 MFSK Frequency Use ($M = 4$)

FSK on Voice Grade Line

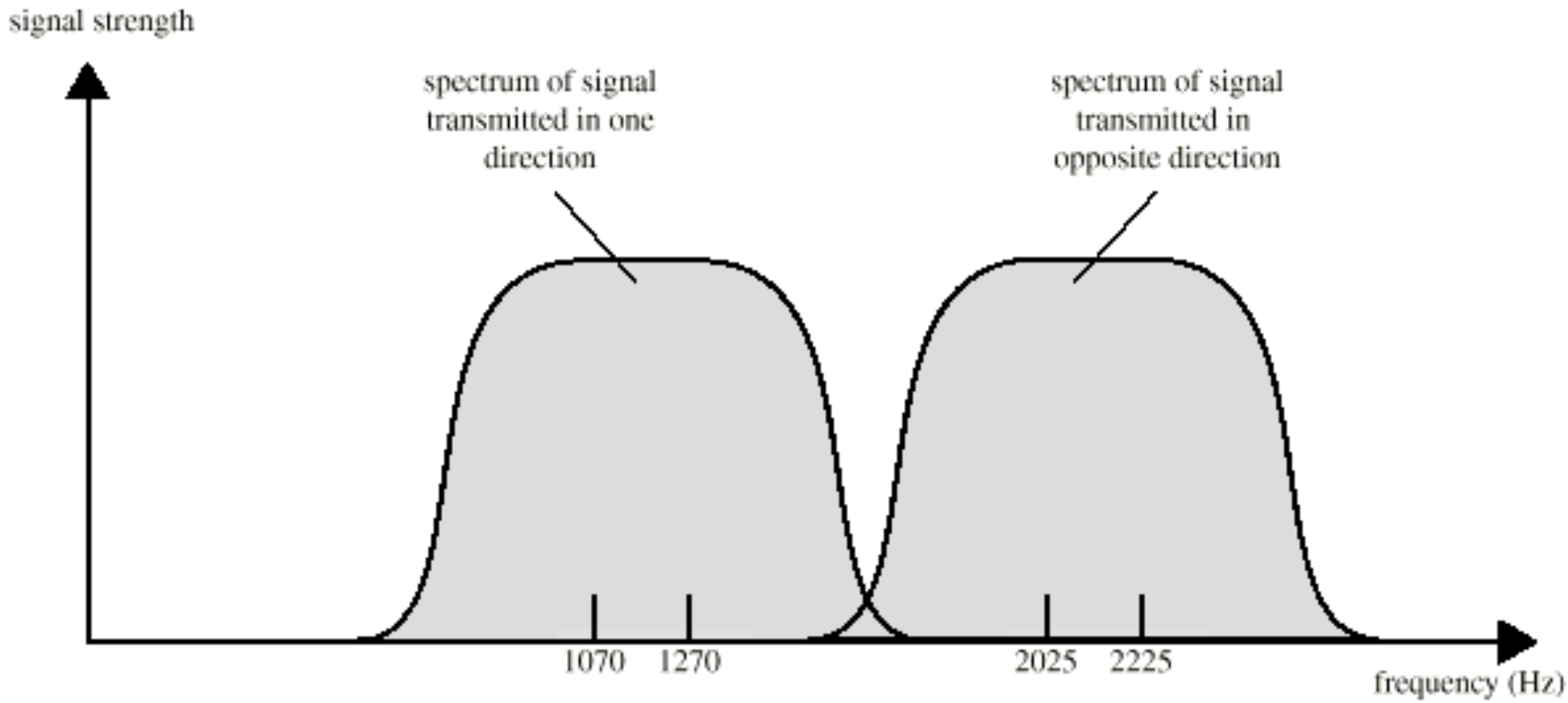

Figure 5.8 Full-Duplex FSK Transmission on a Voice-Grade Line

Phase Shift Keying

- Phase of carrier signal is shifted to represent data
- Binary PSK
  - Two phases represent two binary digits
- Differential PSK
  - Phase shifted relative to previous transmission rather than some reference signal

Binary PSK

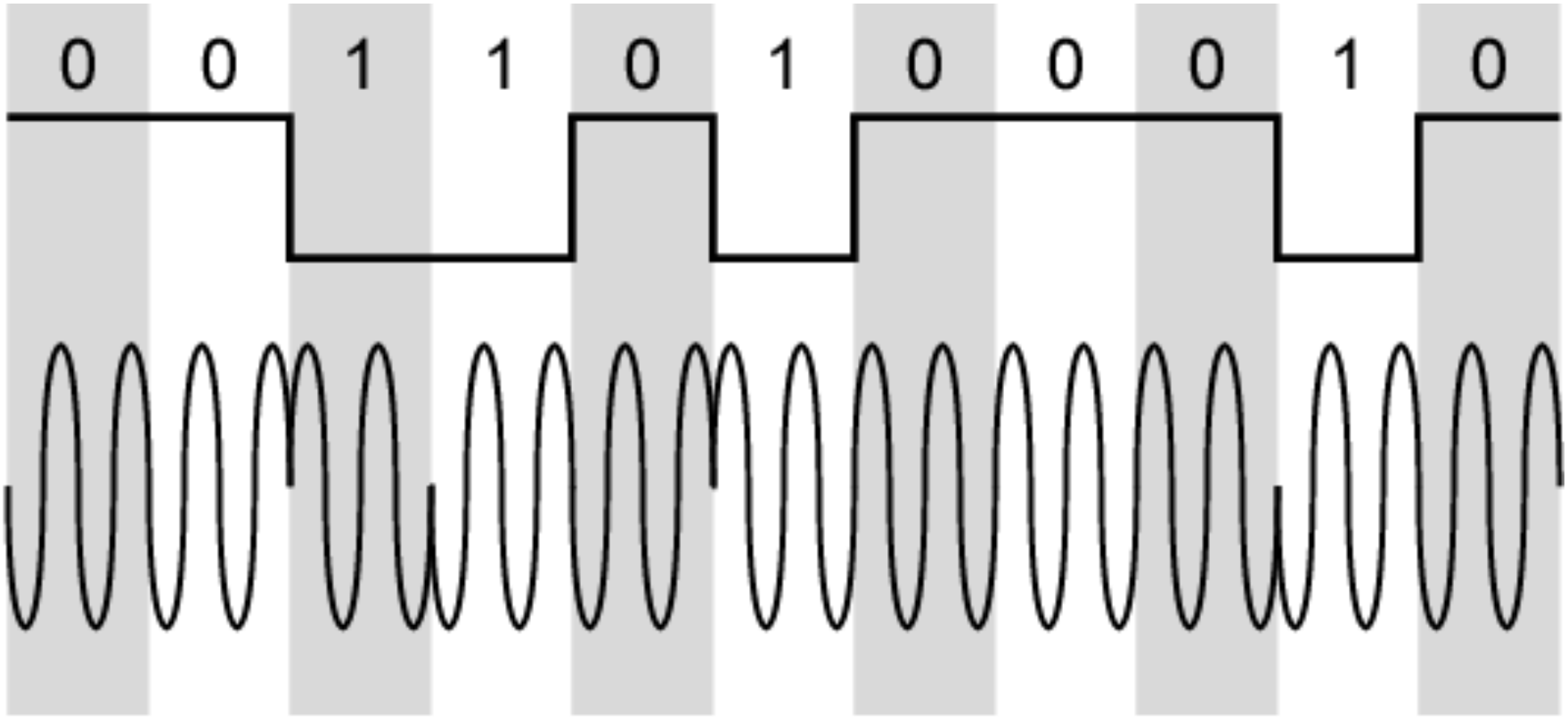

Quadrature (four-level) PSK

- More efficient use by each signal element representing more than one bit
  - e.g. shifts of $\pi/2$ (90°)
  - Each element represents two bits
  - Can use 8 phase angles and have more than one amplitude
  - 9600bps modem use 12 angles, four of which have two amplitudes
- Offset QPSK (OQPSK)
  - also called “orthogonal QPSK”
  - Delay in Q stream

Example QPSK

- signals

11 $$s(t) = A\cos(2\pi f_c t + \frac{\pi}{4})$$

01 $$s(t) = A\cos(2\pi f_c t + \frac{3\pi}{4})$$

00 $$s(t) = A\cos(2\pi f_c t - \frac{3\pi}{4})$$

10 $$s(t) = A\cos(2\pi f_c t - \frac{\pi}{4})$$

QPSK and OQPSK Modulators

QPSK signal: $$s(t) = \boxed{\frac{1}{\sqrt{2}}} I(t)\cos 2\pi f_c t - \boxed{\frac{1}{\sqrt{2}}} Q(t)\sin 2\pi f_c t$$

binary 1 and 0

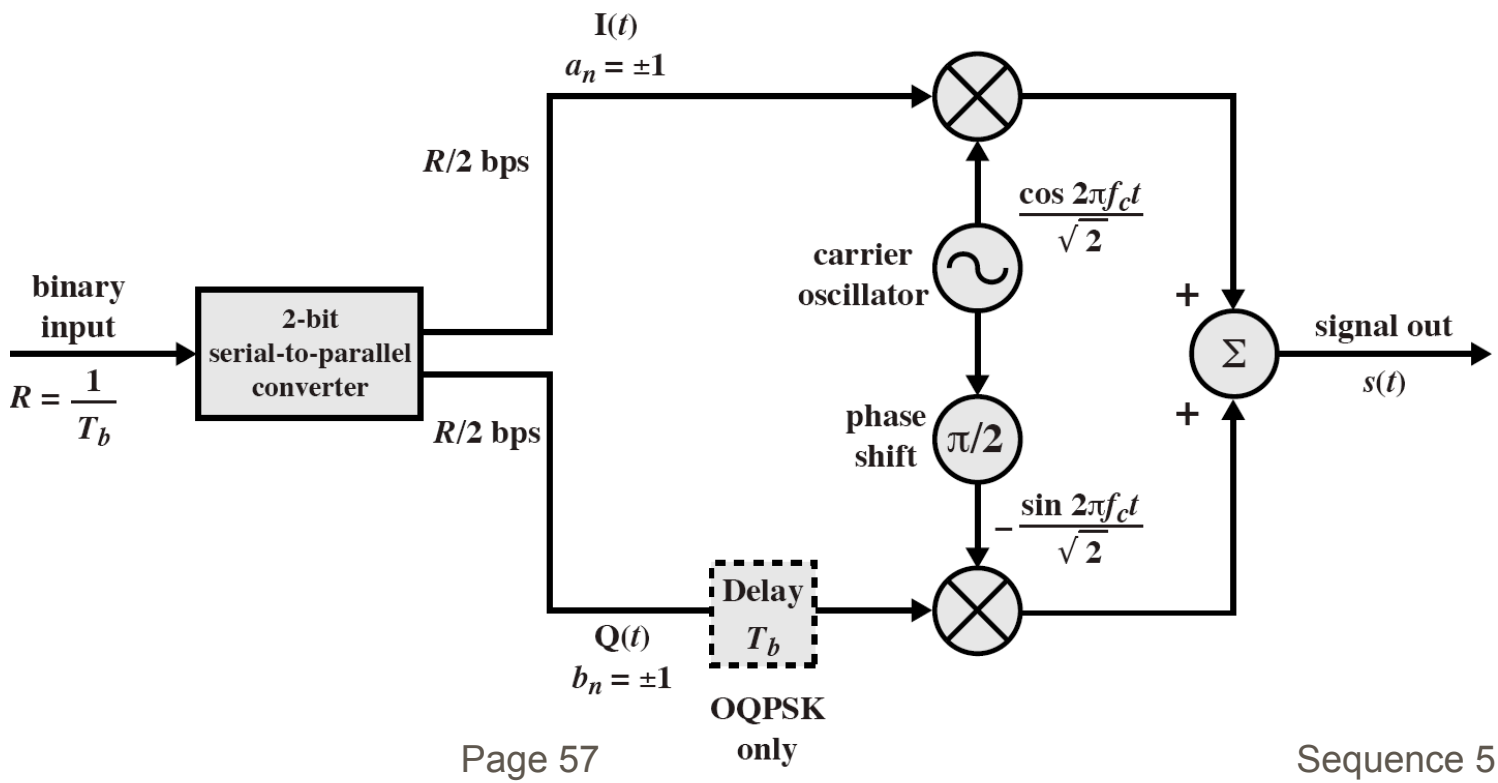

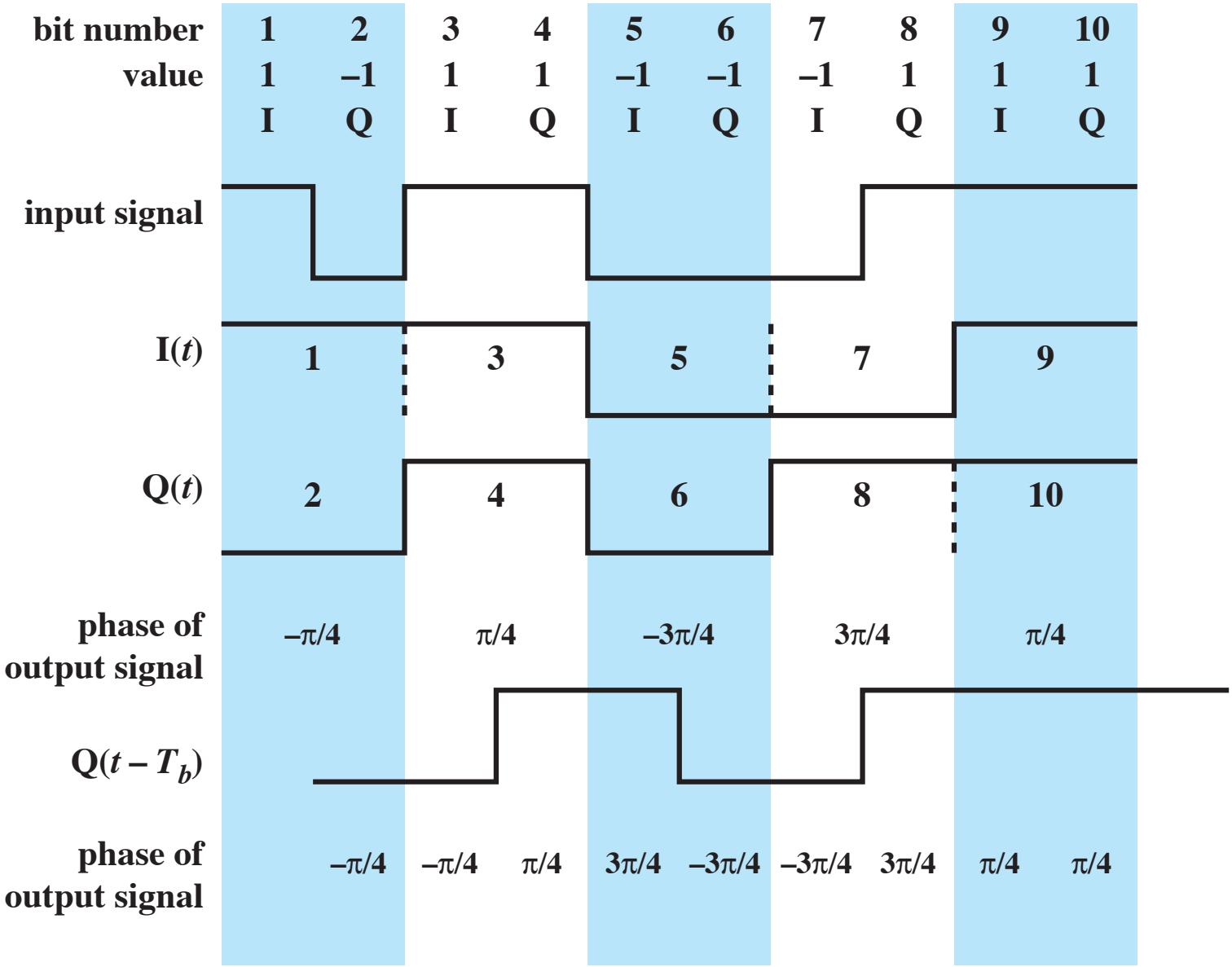

Figure 5.12 Example of QPSK and OQPSK Waveforms

Performance of Digital to Analog Modulation Schemes

- Bandwidth
  - ASK and PSK bandwidth directly related to bit rate
  - FSK bandwidth is larger. Why?
  - Note the difference in the derivation of the math in Stallings compare to the previous arguments based on the spectrum.
- In the presence of noise, bit error rate of PSK and QPSK are about 3dB superior to ASK and FSK

Quadrature Amplitude Modulation

- QAM used on asymmetric digital subscriber line (ADSL) and some wireless
- Combination of ASK and PSK
- Send two different signals simultaneously on same carrier frequency
  - Use two copies of carrier, one shifted 90°
  - Each carrier is ASK modulated
  - Two independent signals over same medium
    - binary 0 = absence of signal, binary 1 = carrier
    - same holds for path that uses the shifted carrier
  - Demodulate and combine for original binary output

QAM Modulator

QAM signal: $$s(t) = d_1(t)\cos 2\pi f_c t + d_2(t)\sin 2\pi f_c t$$

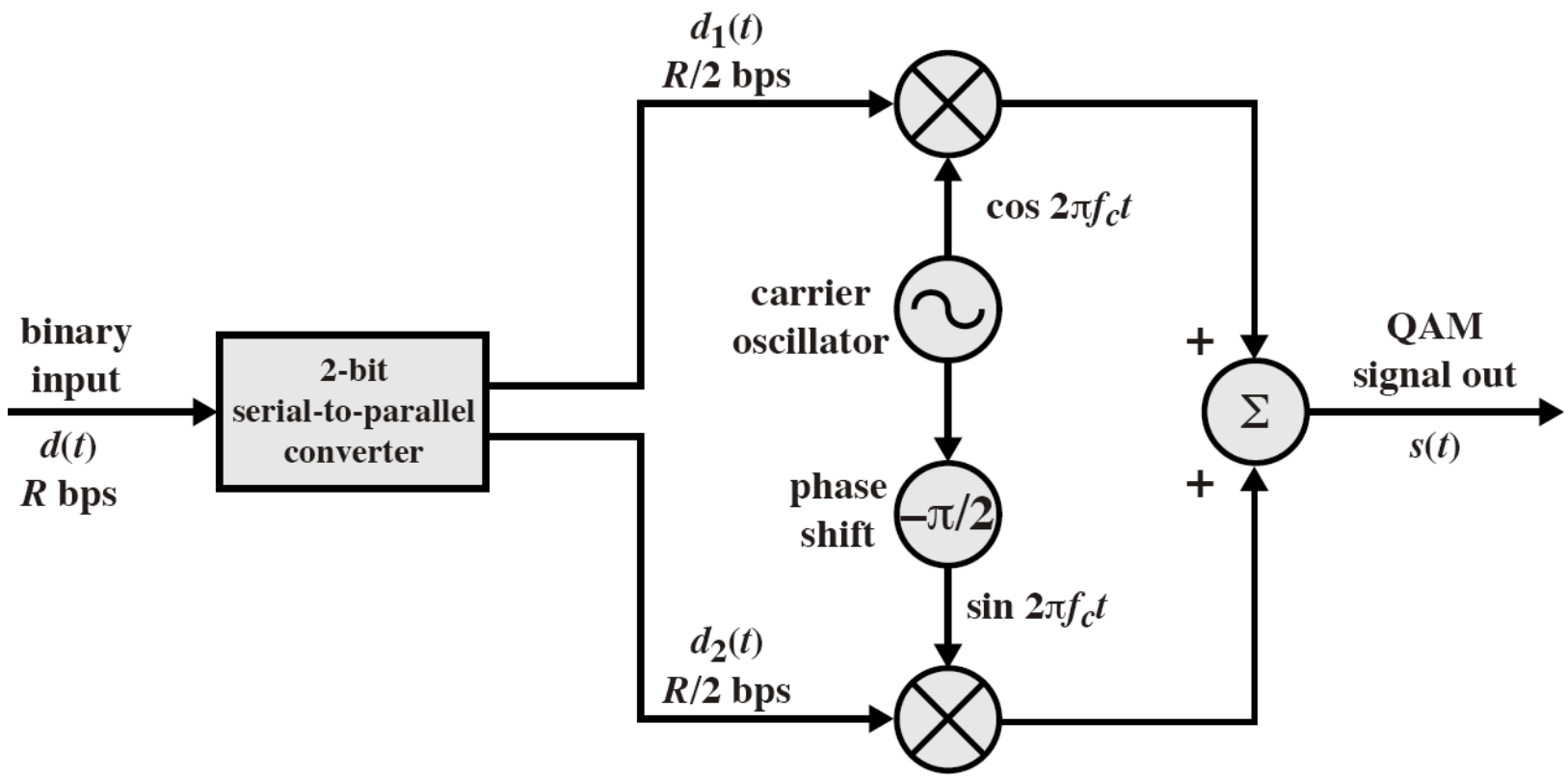

QAM Levels

- Two level ASK
  - —Each of two streams in one of two states
  - —Four state system
- Essentially this is a four level ASK
  - —Combined stream in one of 16 states
- 64 and 256 state systems have been implemented
- Improved data rate for given bandwidth
  - —Increased potential error rate

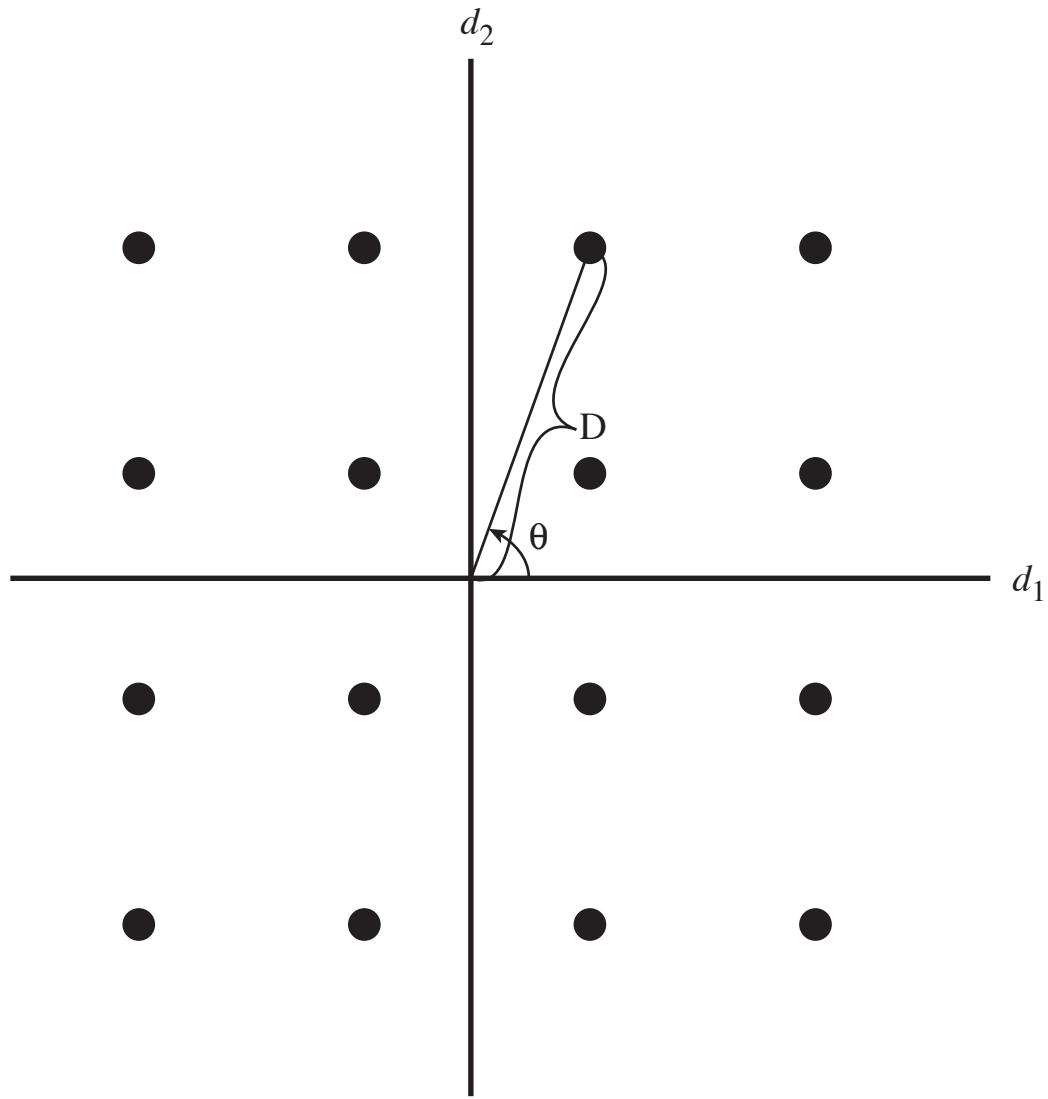

Figure 15.15 16-QAM Constellation

Analog Data, Digital Signal

- Digitization
  - Conversion of analog data into digital data
  - Digital data can then be transmitted using NRZ-L
  - Digital data can then be transmitted using code other than NRZ-L
  - Digital data can then be converted to analog signal
  - Analog to digital conversion done using a codec
  - Pulse code modulation
  - Delta modulation

Digitizing Analog Data

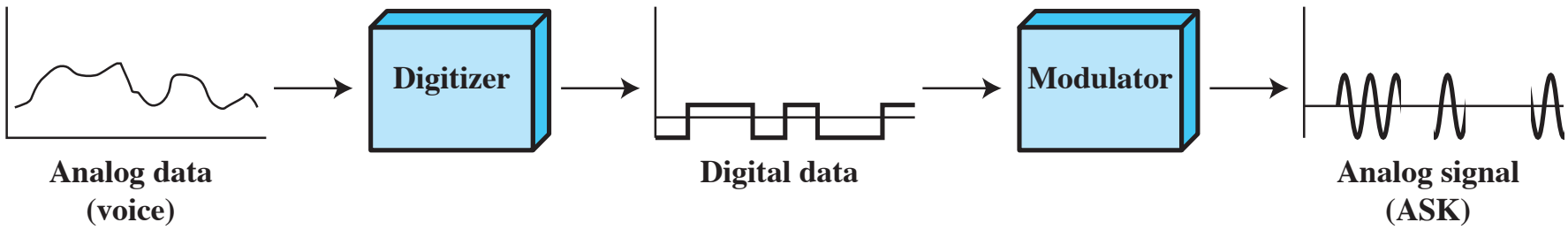

Figure 5.16 Digitizing Analog Data

Sampling theorem

- If a signal is sampled at regular intervals at a rate higher than twice the highest signal frequency, the samples contain all the information of the original signal
  - in short: sample with rate more than twice the highest signal frequency
  - e.g. Voice data limited to below 4000Hz, thus, require 8000 sample per second
  - the samples are analog samples
    - think of a slice of the signal
  - the signal can be reconstructed from the samples using a lowpass filter

PAM and PCM

- Pulse Amplitude Modulation (PAM)
  - "get slices of analog signals"
- Pulse Code Modulation (PCM)
  - "assign digital code to the analog slice"
  - *n* bits give 2^n levels, e.g. 4 bit give 16 levels
- Quantizing error
  - error depends on granularity of encoding
  - it is impossible to recover original exactly
- Example
  - 8000 samples per second of 8 bits each gives 64kbps

PCM Example

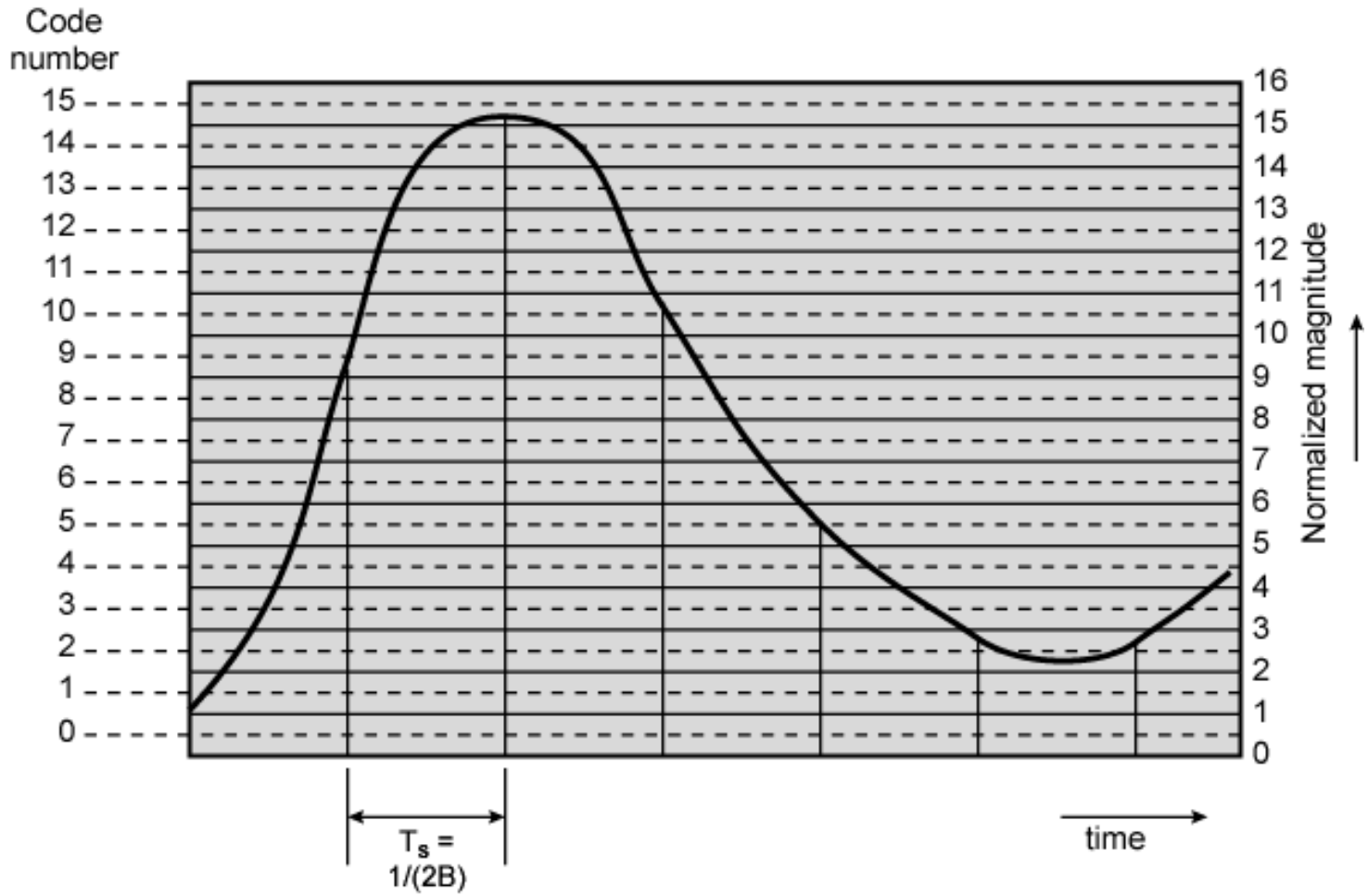

PAM value	1.1	9.2	15.2	10.8	5.6	2.8	2.7
quantized code number	1	9	15	10	5	2	2
PCM code	0001	1001	1111	1010	0101	0010	0010

PCM Block Diagram

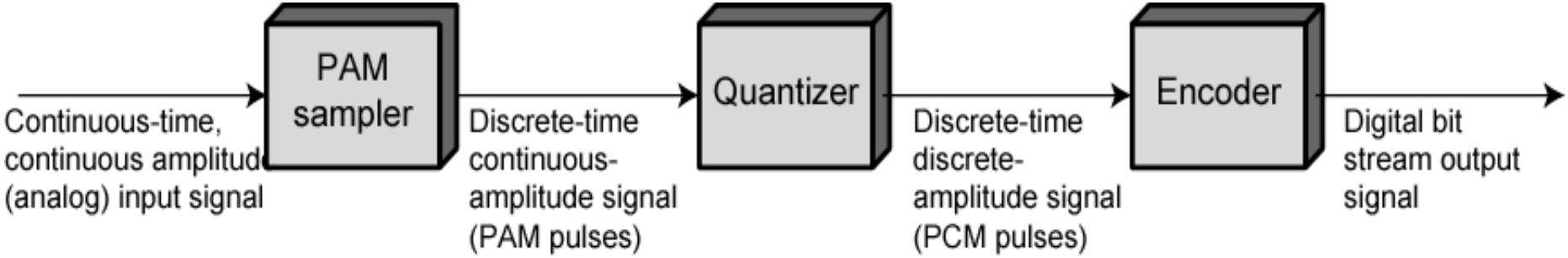

Nonlinear Encoding

- Quantization levels not evenly spaced
- Reduces overall signal distortion
- Can also be done by companding

Effect of Non-Linear Coding

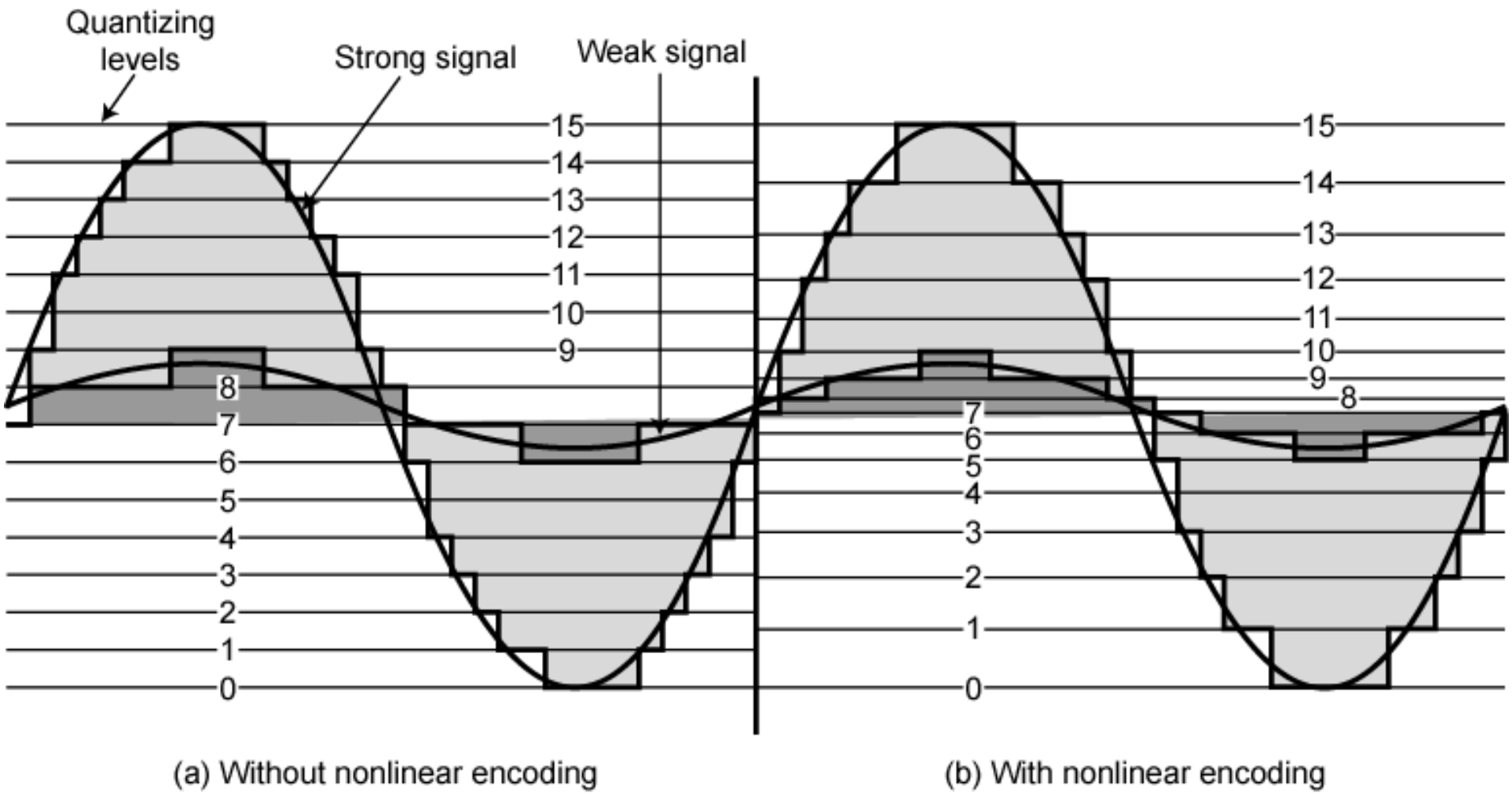

Typical Companding Functions

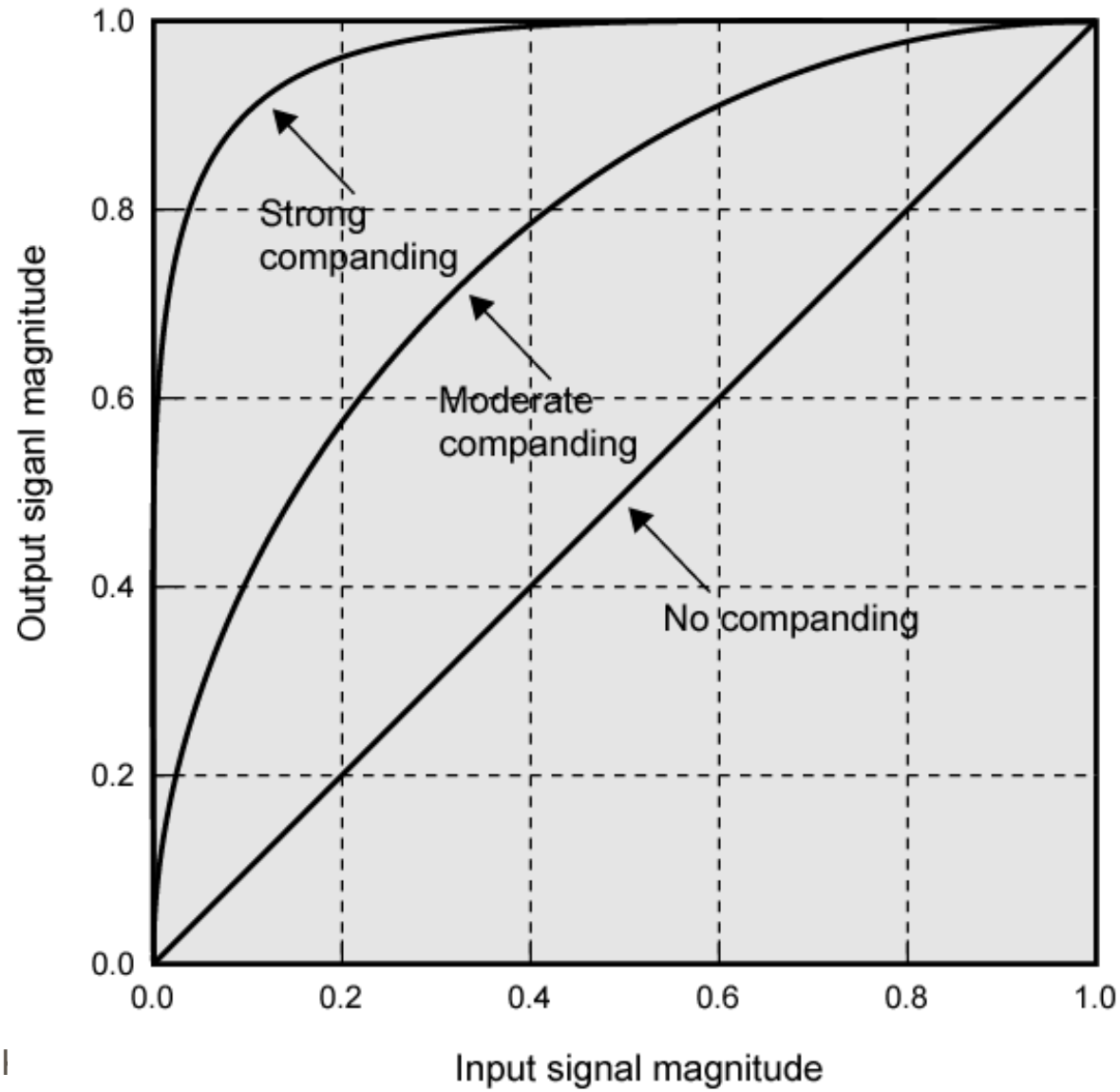

Delta Modulation

- Analog input is approximated by a staircase function
- Move up or down one level (δ) at each sample interval
- Binary behavior
  - —Function moves up or down at each sample interval

Delta Modulation - example

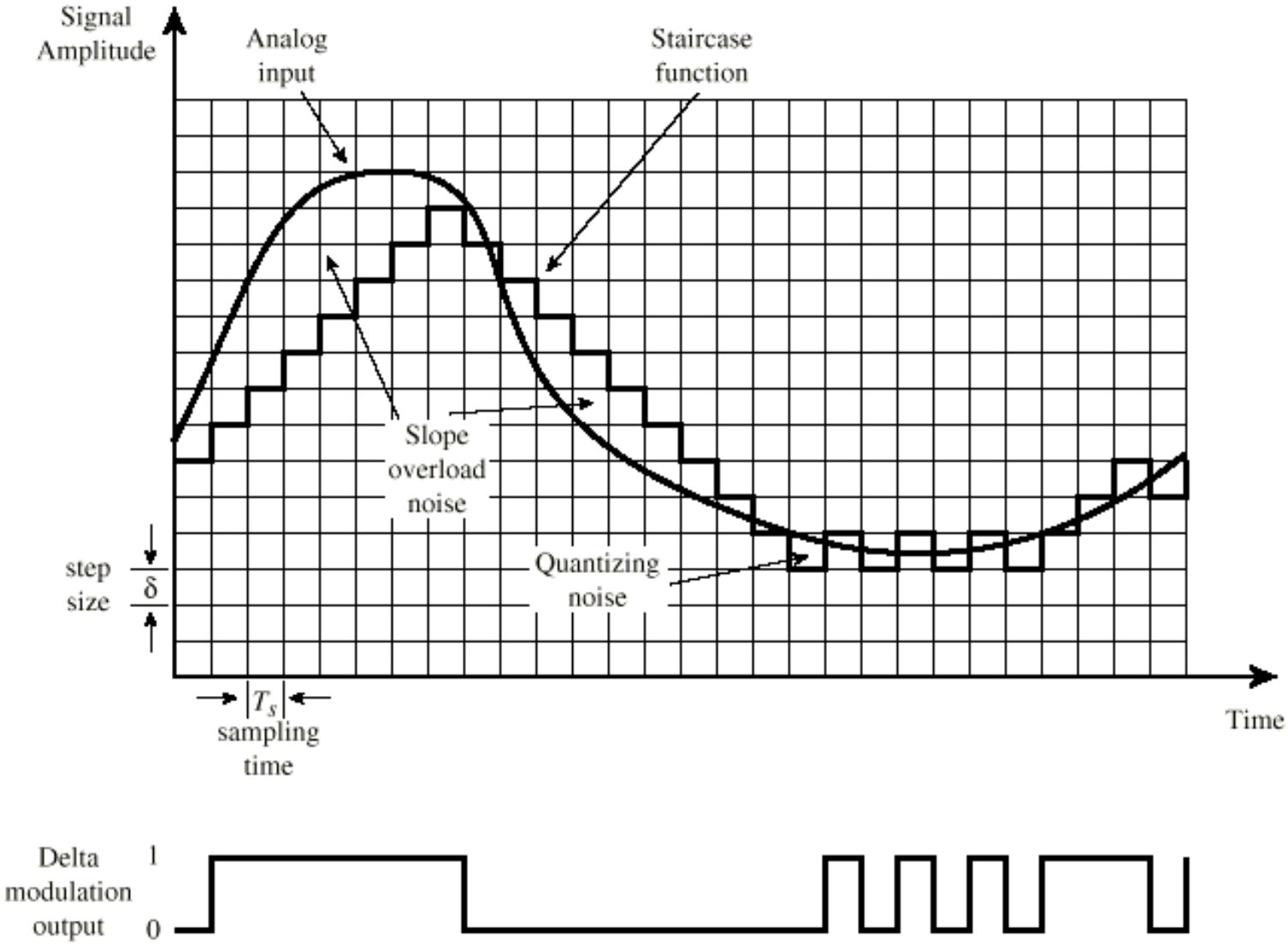

Delta Modulation - Operation

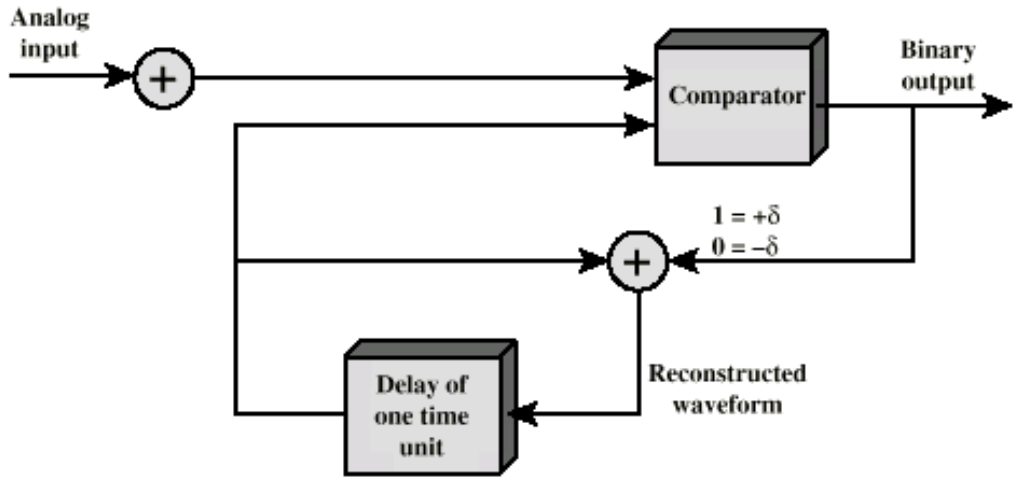

(a) Transmission

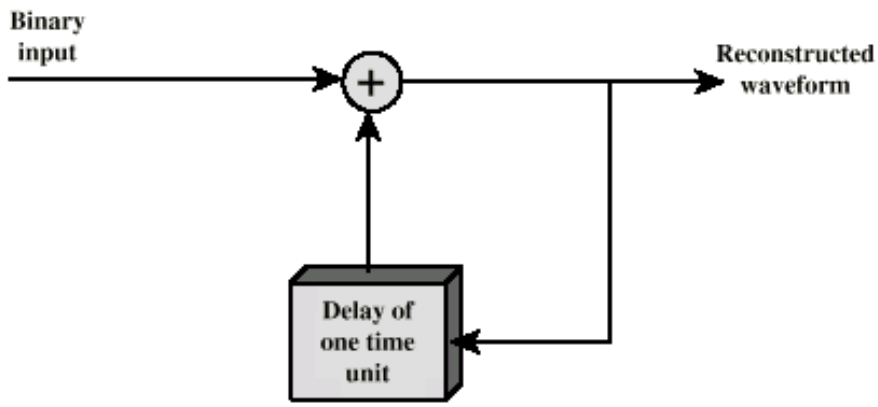

(b) Reception

Delta Modulation - Performance

- Good voice reproduction
  - PCM - 128 levels (7 bit)
  - Voice bandwidth 4khz
  - Should be 8000 x 7 = 56kbps for PCM
- Data compression can improve on this
  - e.g. Interframe coding techniques for video

Analog Data, Analog Signals

- Why modulate analog signals?
  - Higher frequency can give more efficient transmission
  - Permits frequency division multiplexing (chapter 8)
- Types of modulation
  - Amplitude
  - Frequency
  - Phase

Analog Modulation

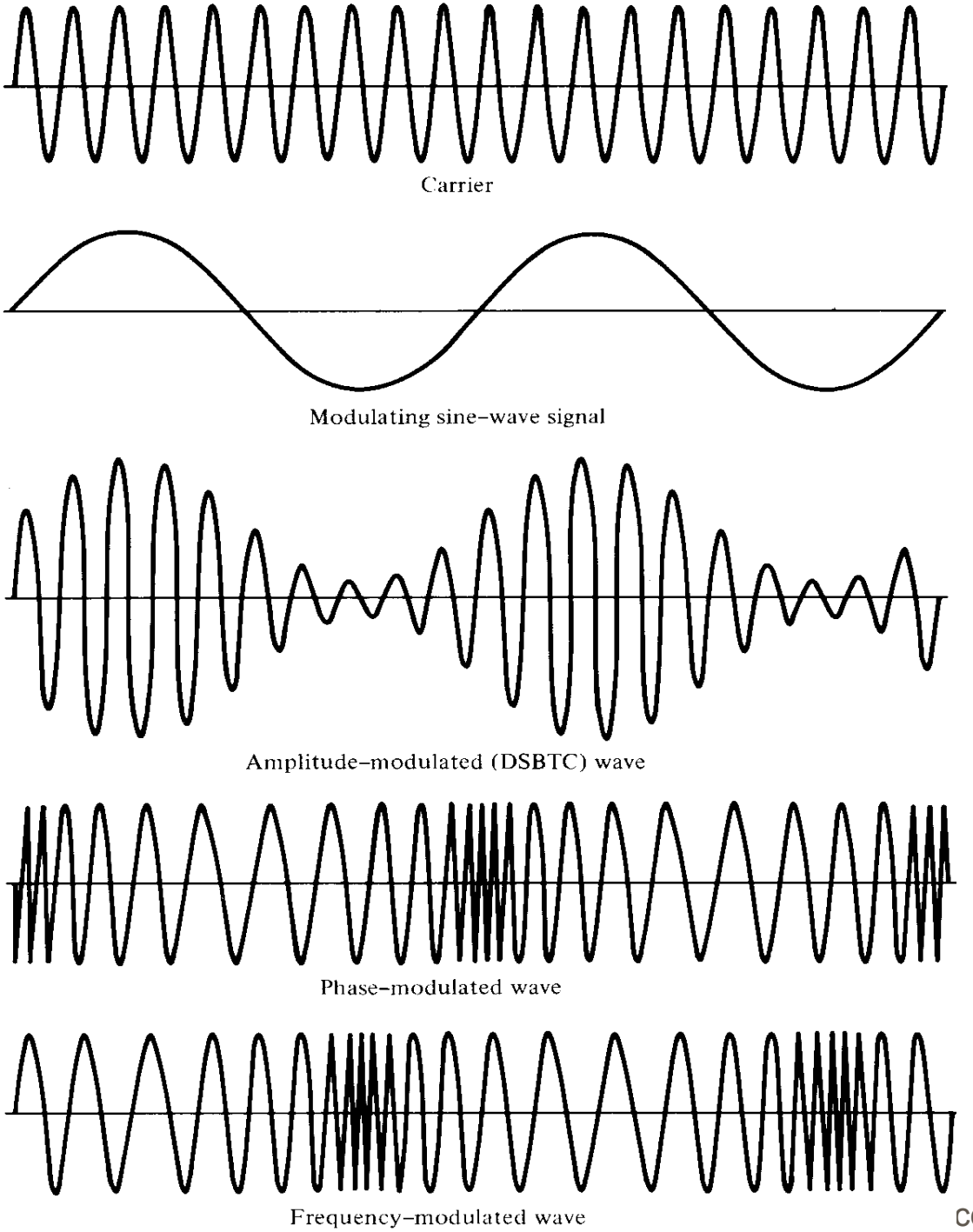

Summary

- looked at signal encoding techniques
  - —digital data, digital signal
  - —analog data, digital signal
  - —digital data, analog signal
  - —analog data, analog signal