Chapter 9:

Circuit Switching and Packet Switching

Switching Networks

- Long distance transmission is typically done over a network of switched nodes
- Nodes not concerned with content of data
- End devices are stations
  - Computer, terminal, phone, etc.
- A collection of nodes and connections is a communications network
- Data is routed by being switched from node to node

Nodes

- Nodes may connect to other nodes only, or to stations and other nodes
- Node to node links usually multiplexed
- Network is usually partially connected
  - Some redundant connections are desirable for reliability
- Two different switching technologies
  - Circuit switching
  - Packet switching

Simple Switched Network

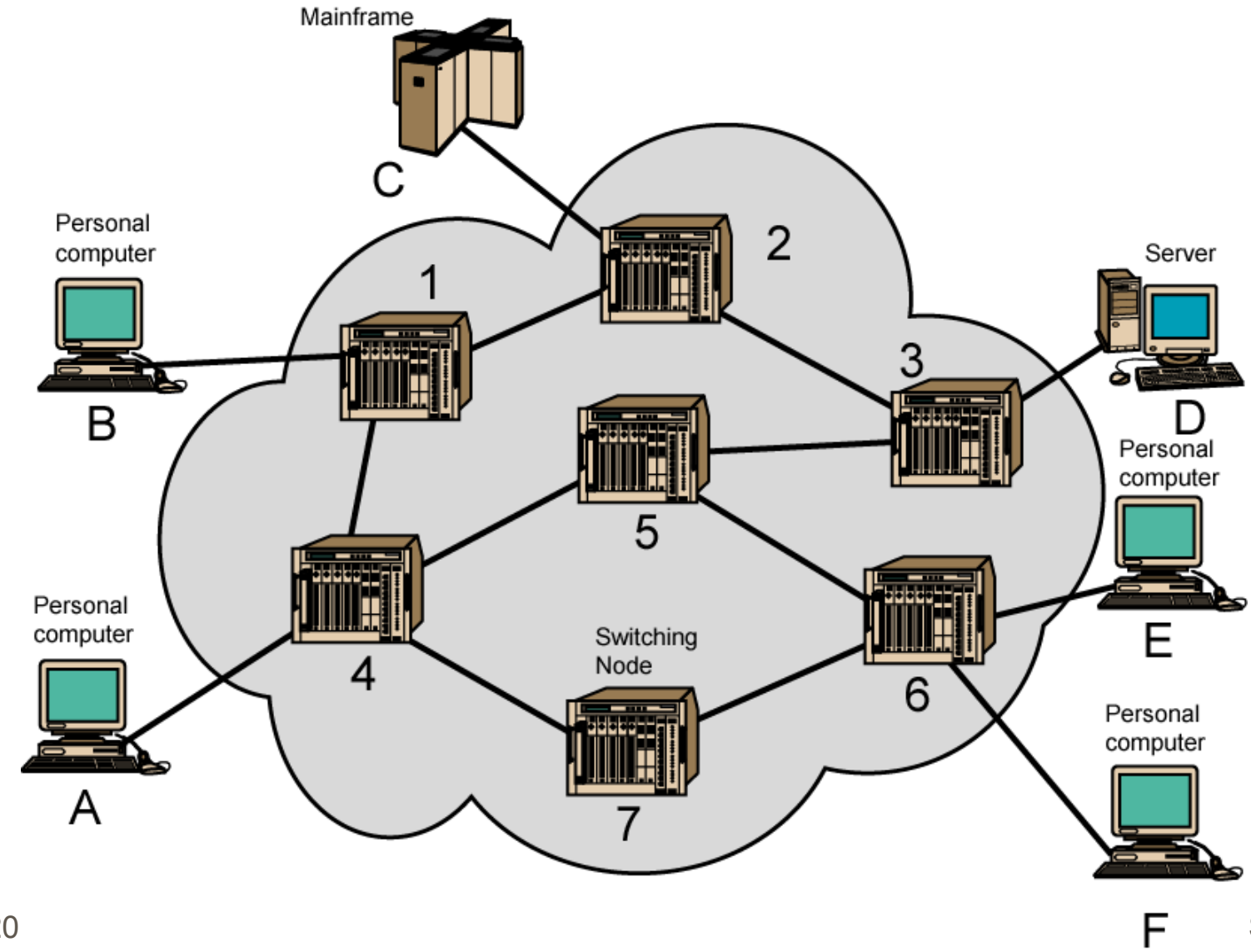

Circuit Switching

- Dedicated communication path between two stations
- Three phases
  - Establish
  - Transfer
  - Disconnect
- Must have switching capacity and channel capacity to establish connection
- Must have intelligence to work out routing

Circuit Switching

- Inefficient
  - Channel capacity dedicated for duration of connection
  - If no data, capacity wasted
- Set up (connection) takes time
- Once connected, transfer is transparent
- Developed for voice traffic (phone)

Public Circuit Switched Network

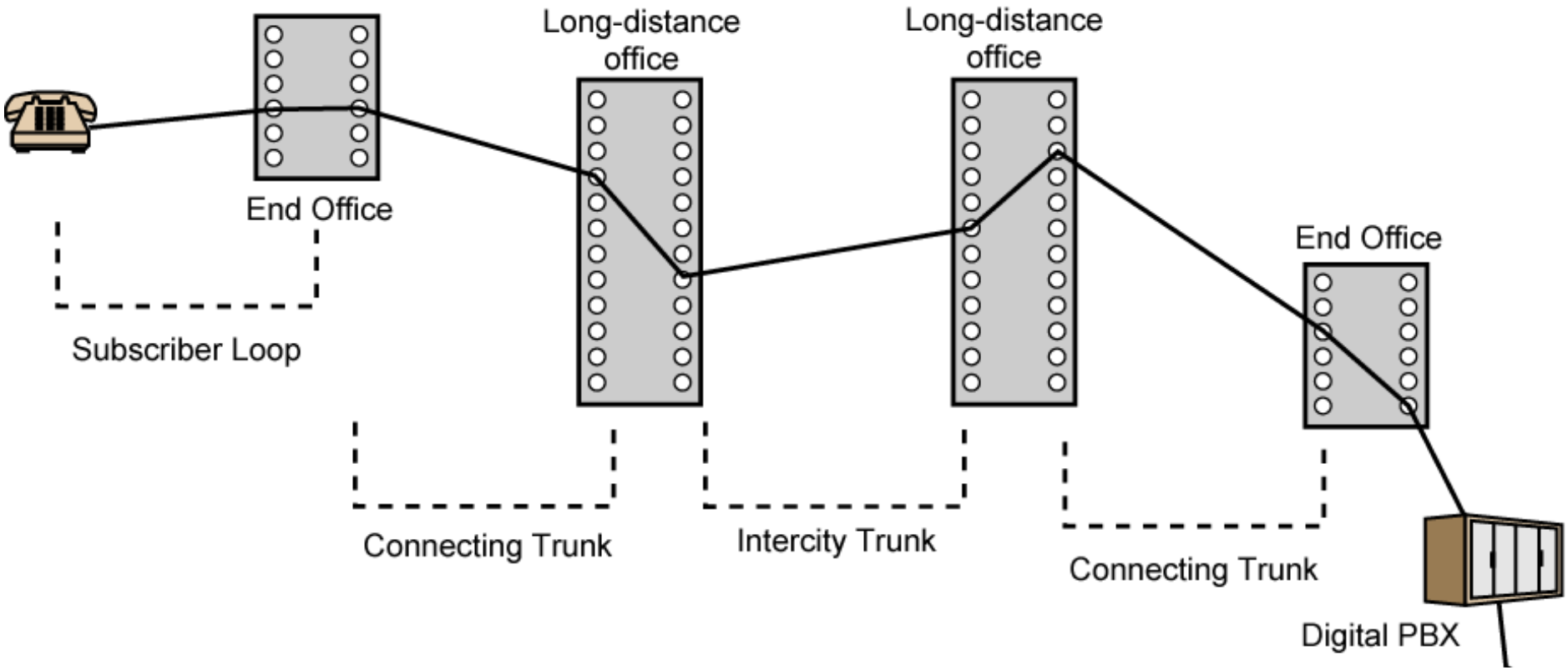

Telecom Components

- Subscriber
  - Devices attached to network
- Subscriber line
  - Local Loop
  - Subscriber loop
  - Connection to network
  - Few km up to few tens of km
- Exchange
  - Switching centers
  - End office - supports subscribers
- Trunks
  - Branches between exchanges
  - Multiplexed

Circuit Establishment

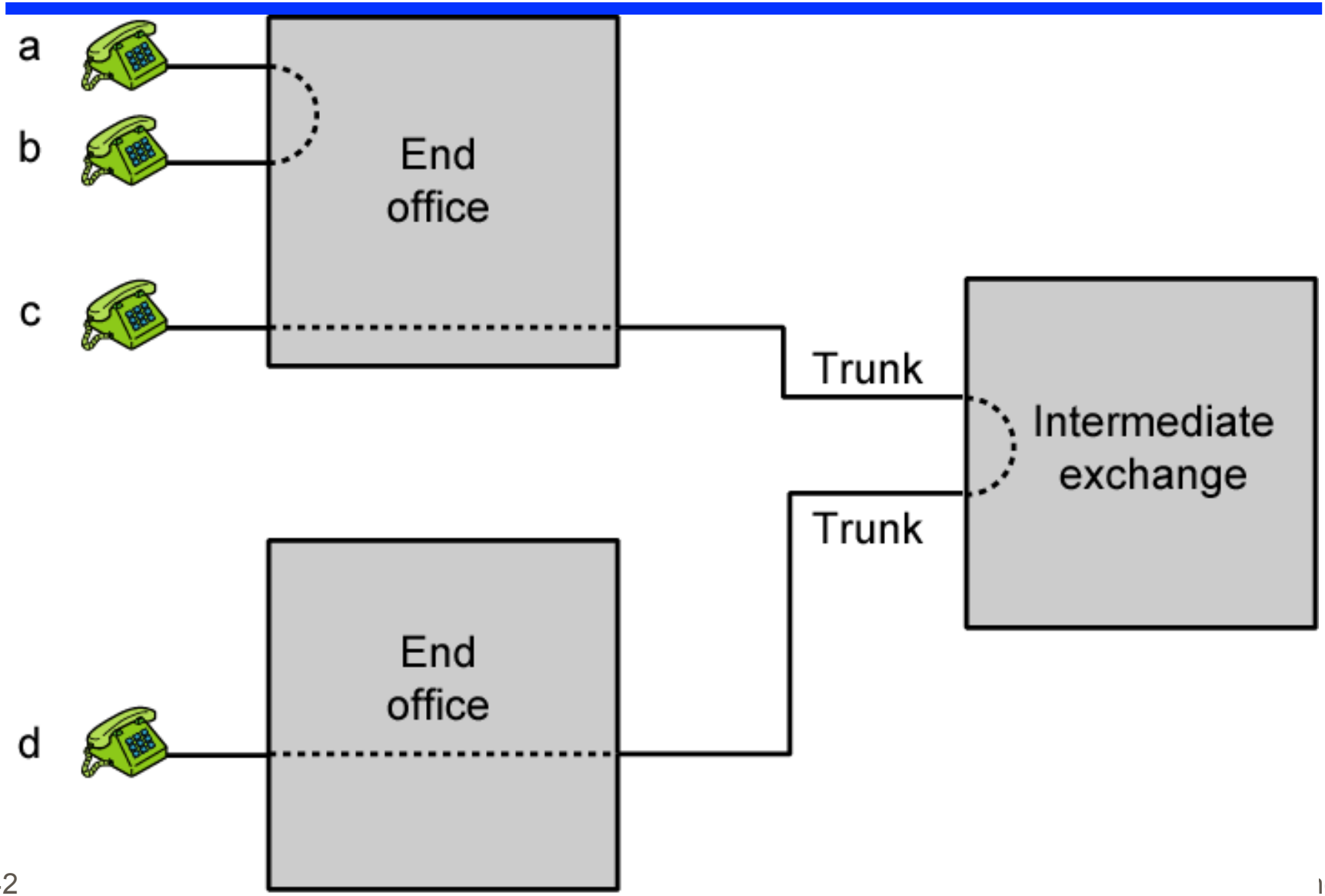

Circuit Switching Concepts

- Digital Switch
  - Provide transparent signal path between devices
- Network Interface
- Control Unit
  - Establish connections
    - Generally on demand
    - Handle and acknowledge requests
    - Determine if destination is free
    - construct path
  - Maintain connection
  - Disconnect

Circuit Switch Elements

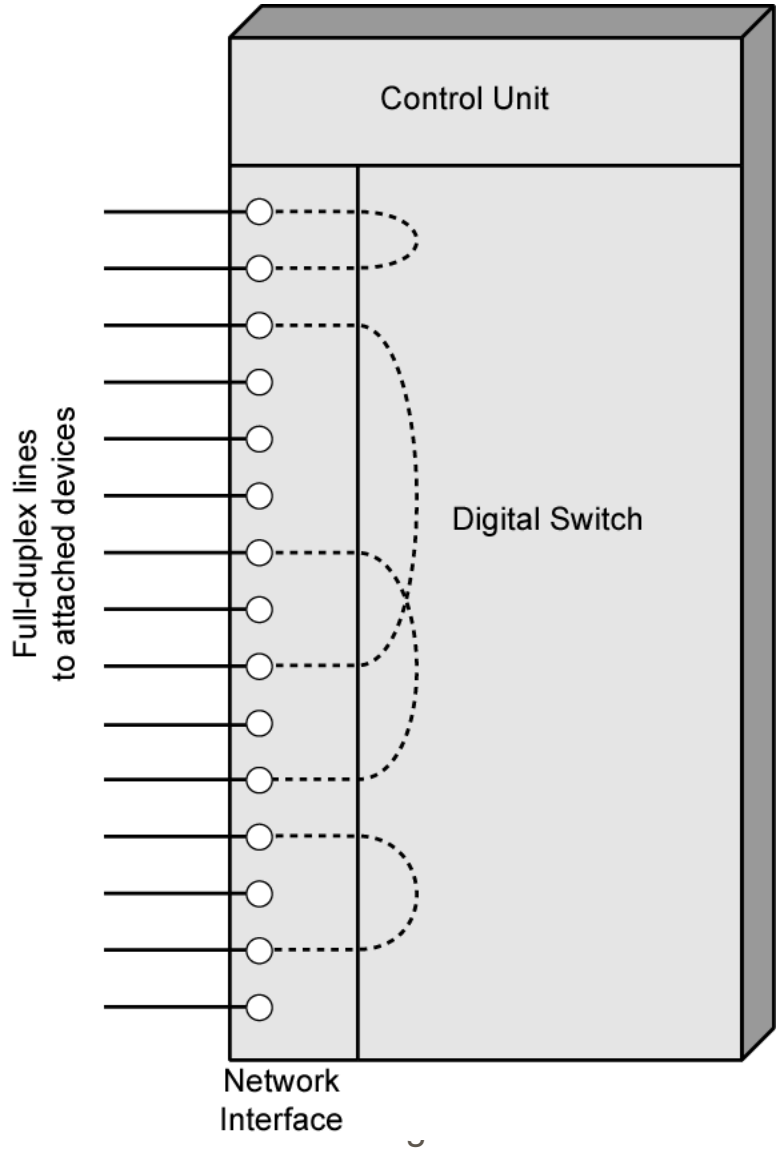

Blocking or Non-blocking

- Blocking
  - A network is unable to connect stations because all paths are in use
  - A blocking network allows this
  - Used on voice systems
    - Short duration calls
- Non-blocking
  - Permits all stations to connect (in pairs) at once
  - Used for some data connections

Space Division Switch

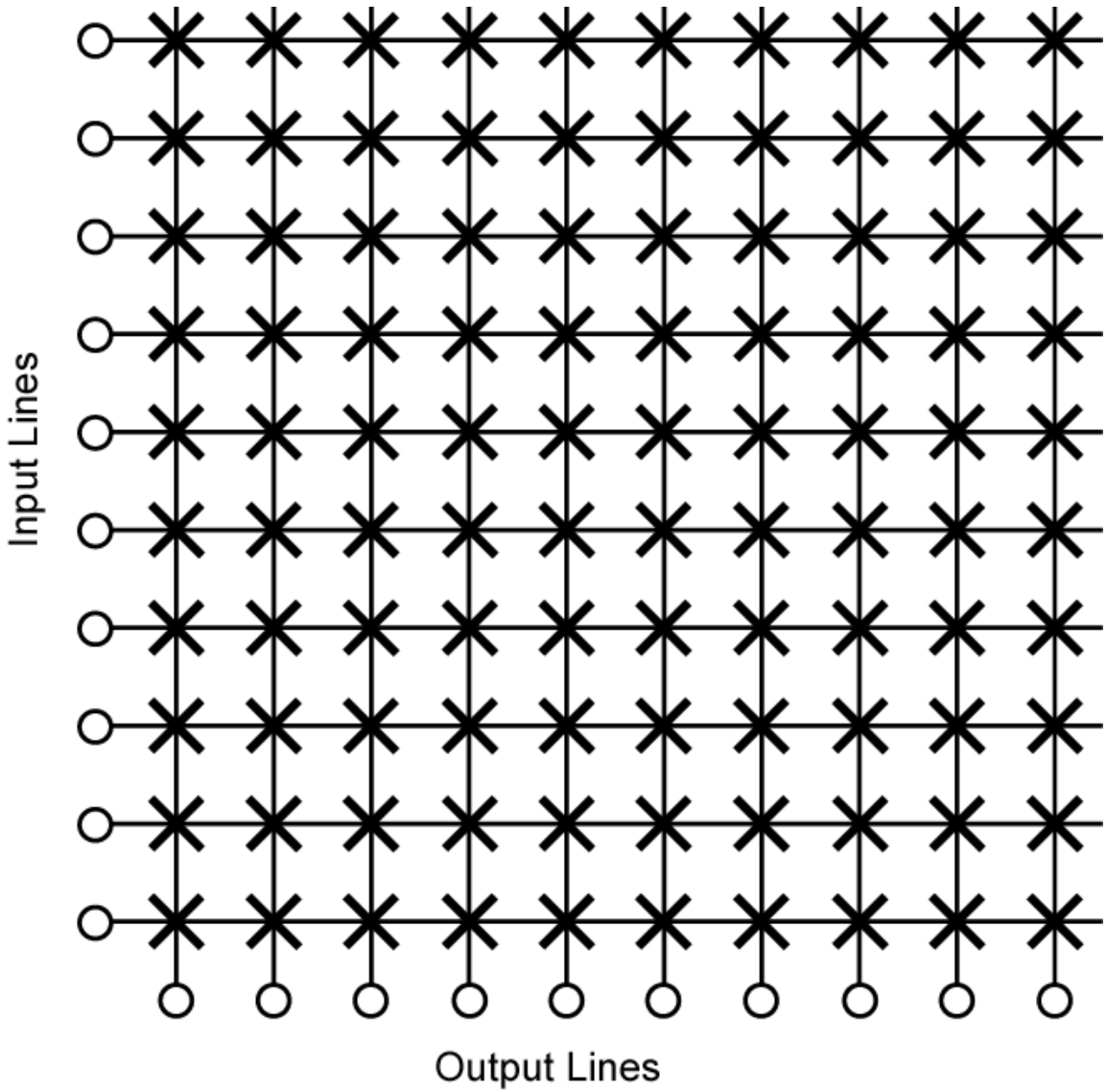

Space Division Switching

- Developed for analog environment
- Separate physical paths
- Crossbar switch
  - Number of cross-points grows in n^2
  - Loss of cross-point prevents connection
  - Inefficient use of cross-points
    - All stations connected, only a few cross-points in use
  - Non-blocking

Multistage Switch

- Reduced number of cross-points
- More than one path through network
  - Increased reliability
- More complex control
- May be blocking

Three Stage Space Division Switch

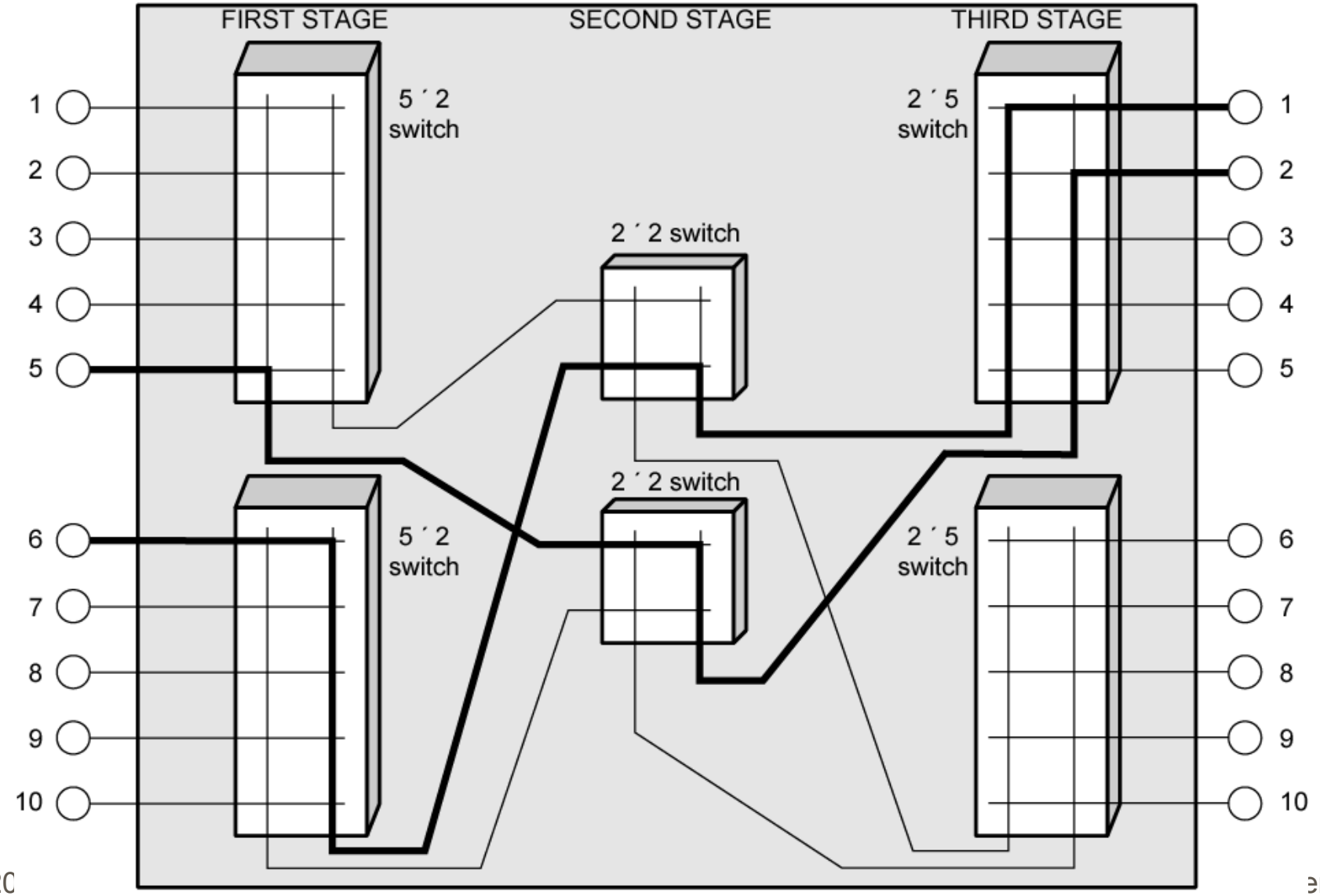

Interconnection Networks

- Omega Network

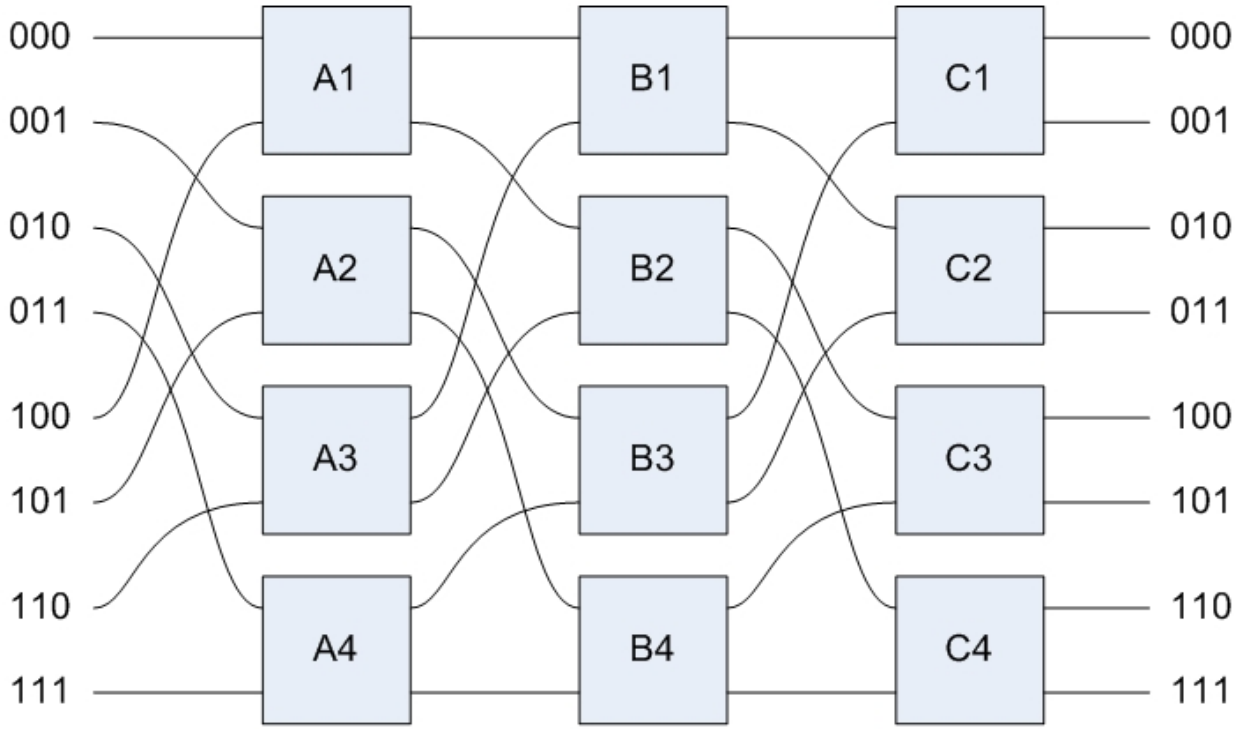

Interconnection Networks

- Butterflies
  - isomorphic to Omega (a composition of shuffle-exchange networks with programmable switches) and SW-Banyan switch
  - closely related to hypercube and shuffle-exchange network
  - number of nodes $N = (k + 1)2^k$
    - this means k + 1 rows (or ranks) consisting of $n = 2^k$ nodes each
  - Let node(*i,j*) refer to the *j*-th node in the *i*-th row, where *i* is in [0,k]
  - Then node(i,j) in row i>0 is connected to two nodes in row i-1
    - node(*i*-1,*j*) and node(*i*-1,*m*) where *m* is the integer found by inverting the *i*-th most significant bit in the binary representation of *j*.
  - Note that if node(*i,j*) is connected to node(*i*-1,*m*), then node(*i,m*) is connected to node(*i*-1,*j*).
  - Benes network is consisting of two butterflies back to back

Interconnection Networks

- Butterflies

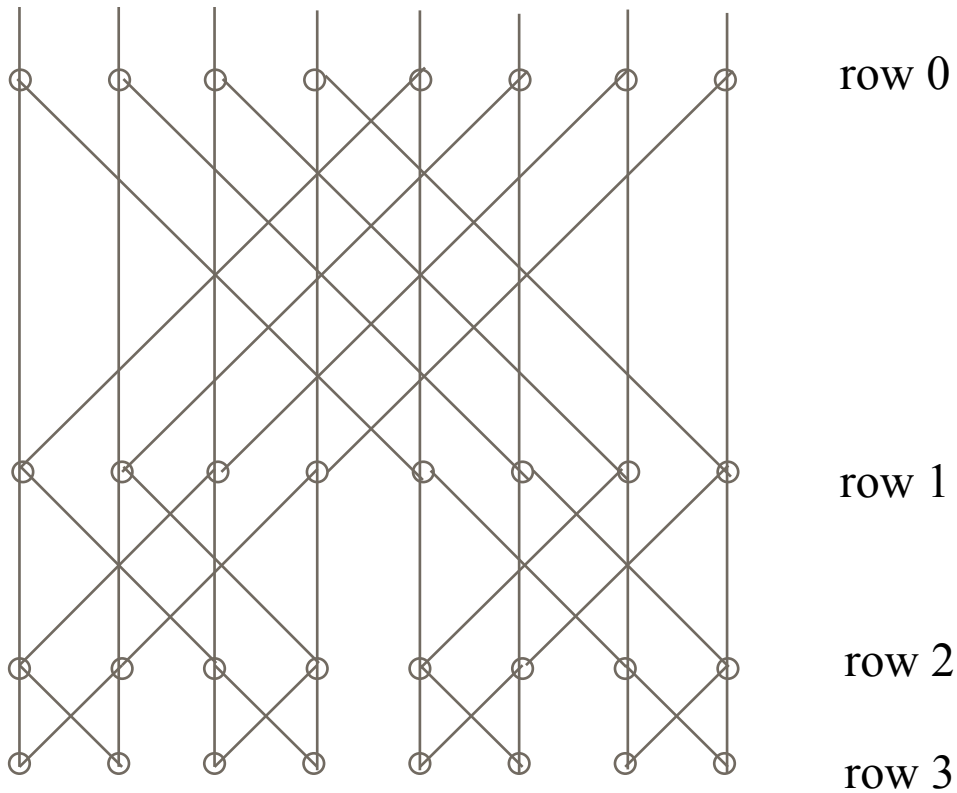

Time Division Switching

- Modern digital systems rely on intelligent control of space and time division elements
- Use digital time division techniques to set up and maintain virtual circuits
- Partition low speed bit stream into pieces that share higher speed stream

Interconnection Networks

An Application: ATM switch architecture

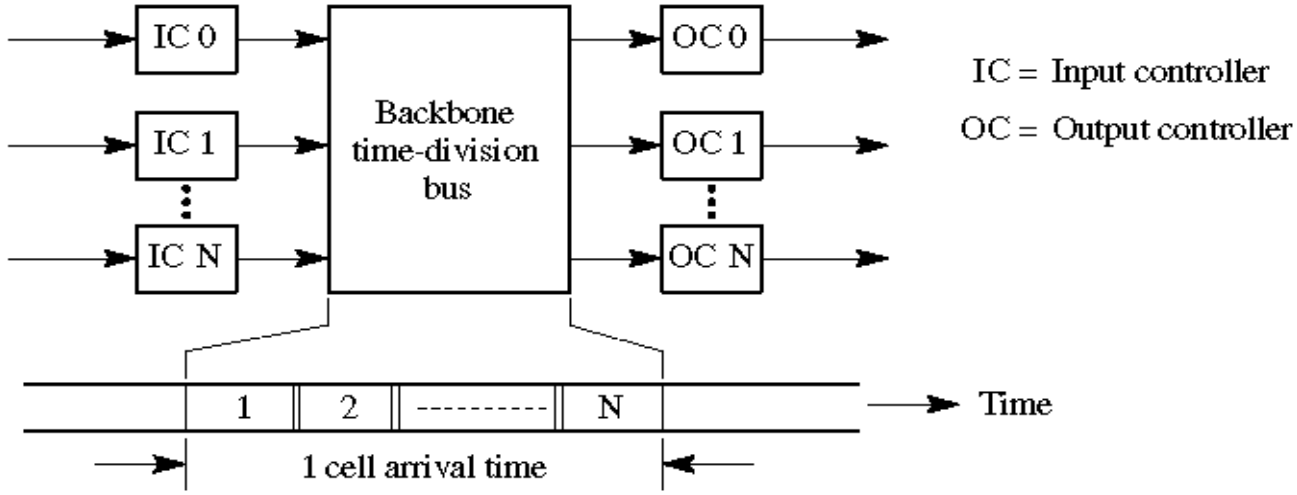

Hal96 fig.10.8

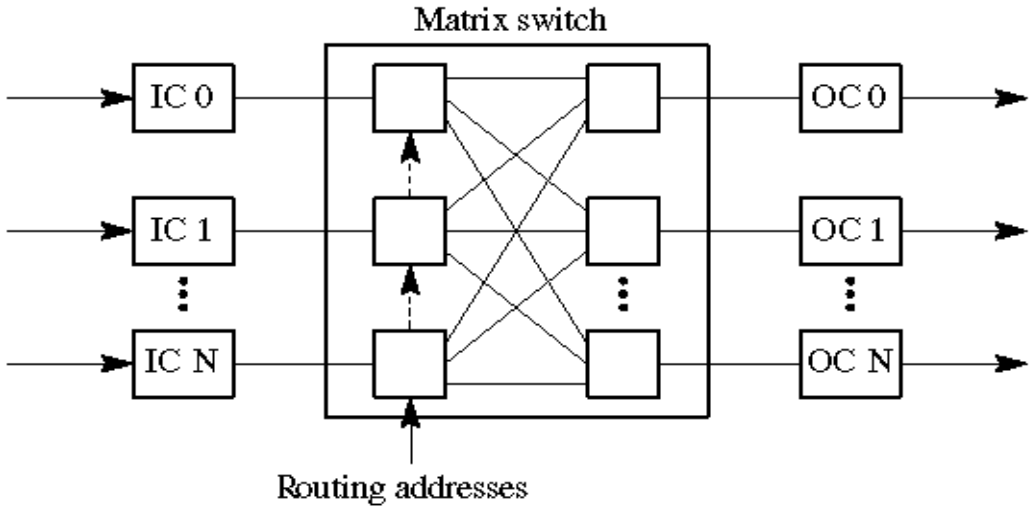

Two extremes

Interconnection Networks

—Delta Switch Matrix

- non-blocking/blocking
- self routing

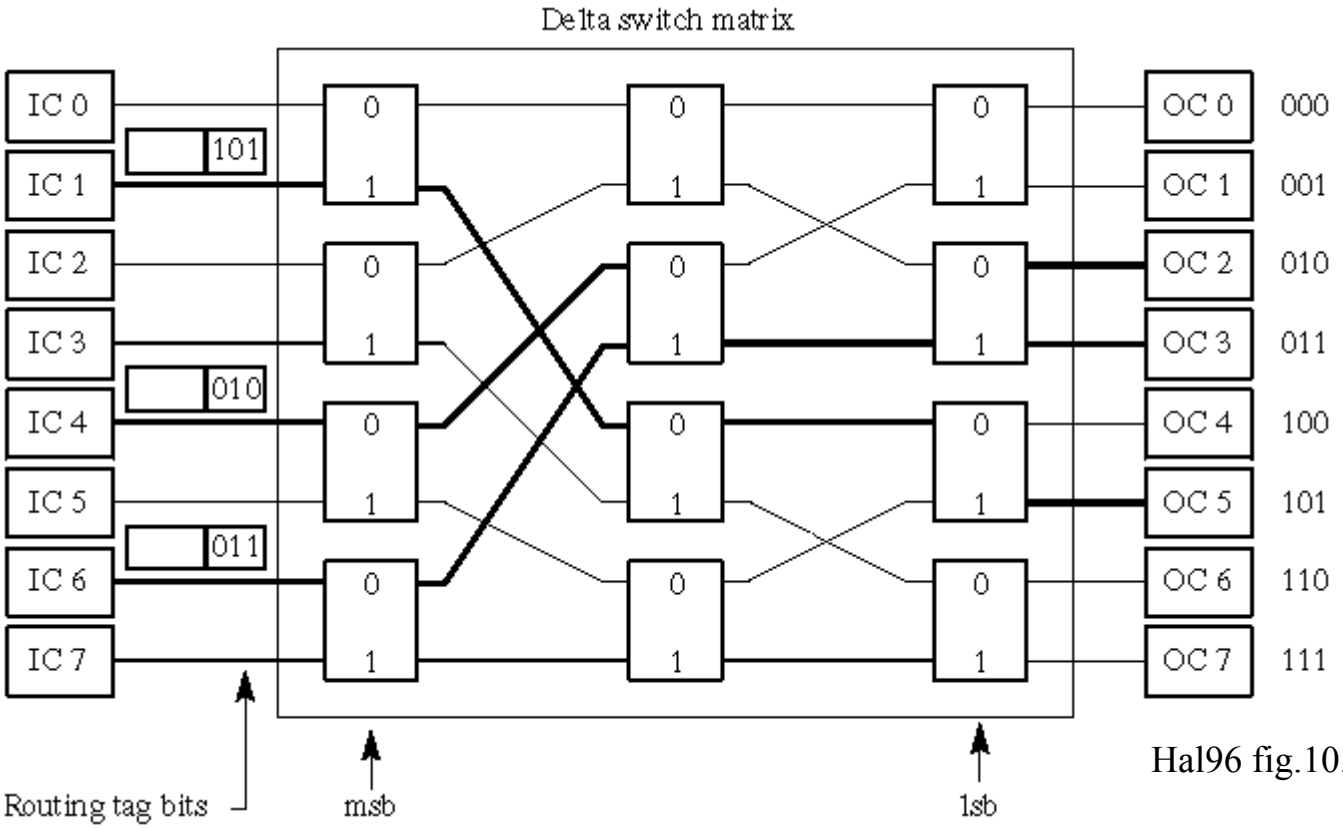

Hal96 fig.10.9

Control Signaling Functions

- Audible communication with subscriber
- Transmission of dialed number
- “Call cannot be completed” indication
- “Call ended” indication
- Signal to ring phone
- Billing info
- Equipment and trunk status info
- Diagnostic info
- Control of specialist equipment

Control Signal Sequence

- Both phones on hook
- Subscriber lifts receiver (off hook)
- End office switch signaled
- Switch responds with dial tone
- Caller dials number
- If target not busy, send ringer signal to target subscriber
- Feedback to caller
  - Ringing tone, engaged (busy) tone, unobtainable
- Target accepts call by lifting receiver
- Switch terminates ringing signal and ringing tone
- Switch establishes connection
- Connection release when Source subscriber hangs up

Switch to Switch Signaling

- Subscribers connected to different switches
- Originating switch seizes inter-switch trunk
- Send “off hook” signal on trunk, requesting digit register at target switch (for address)
- Terminating switch sends “off hook” followed by “on hook” (wink) to show register ready
- Originating switch sends address

Location of Signaling

- Subscriber to network
  - Depends on subscriber device and switch
- Within network
  - Management of subscriber calls and network
  - more complex

In Channel Signaling

- Use same channel for signaling and call
  - Requires no additional transmission facilities
- Inband
  - Uses same frequencies as voice signal
  - Can go anywhere a voice signal can
  - Impossible to set up a call on a faulty speech path
- Out of band
  - Voice signals do not use full 4kHz bandwidth
  - Narrow signal band within 4kHz used for control
  - Can be sent whether or not voice signals are present
  - Need extra electronics
  - Slower signal rate (narrow bandwidth)

Drawbacks of In Channel Signaling

- Limited transfer rate
- Delay between entering address (dialing) and connection
- Overcome by use of common channel signaling

Common Channel Signaling

- Control signals carried over paths independent of voice channel
  - One control signal channel can carry signals for multiple subscriber channels
    - Common control channel for these subscriber lines
  - Associated Mode
    - Common channel closely tracks inter-switch trunks
  - Disassociated Mode
    - Additional nodes (signal transfer points)
    - Effectively two separate networks

Common v. In Channel Signaling

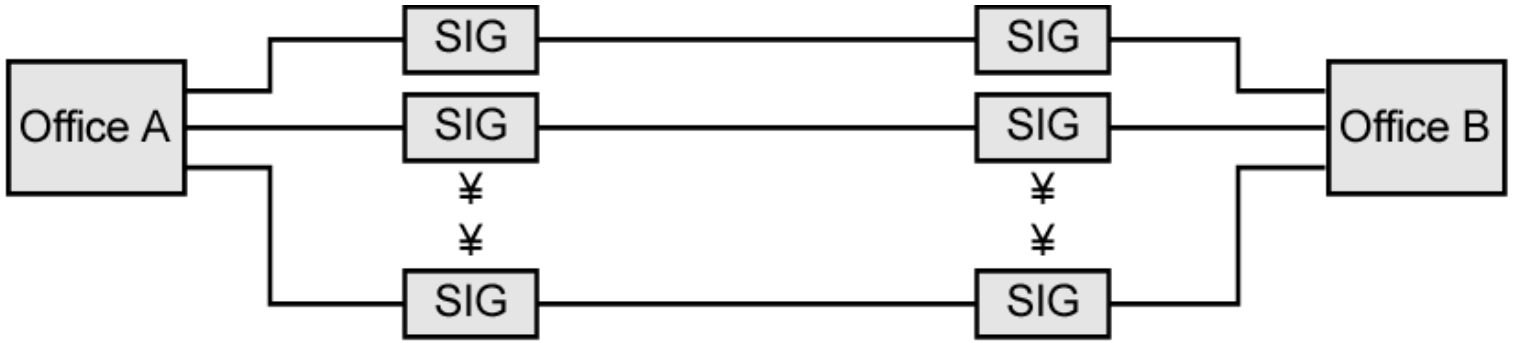

(a) Inchannel

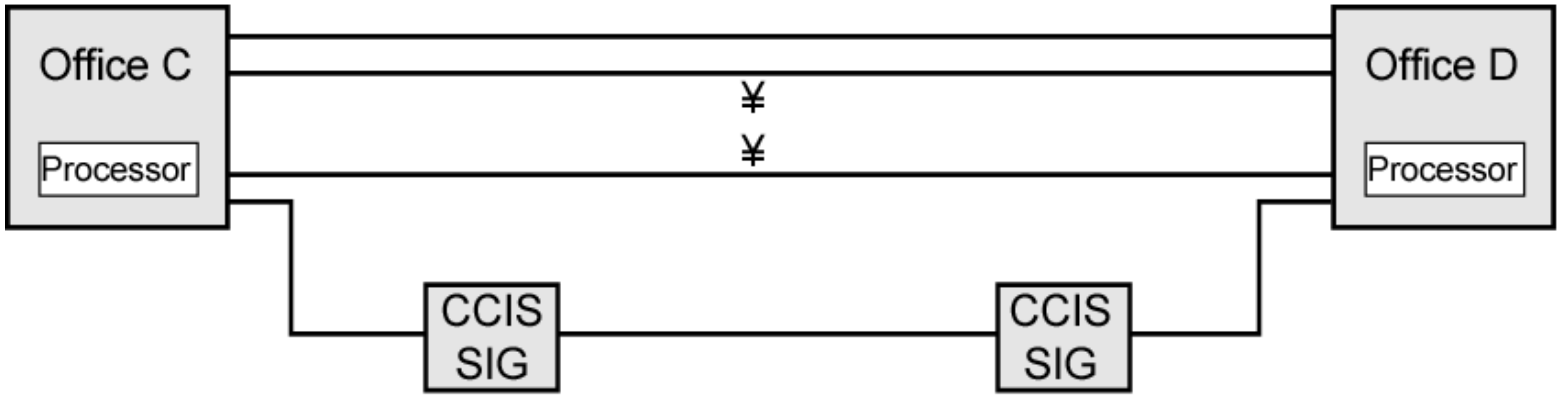

(b) Common channel

CCIS SIG: Common-channel interoffice signaling equipment
SIG: Per-trunk signaling equipment

Common Channel Signaling Modes

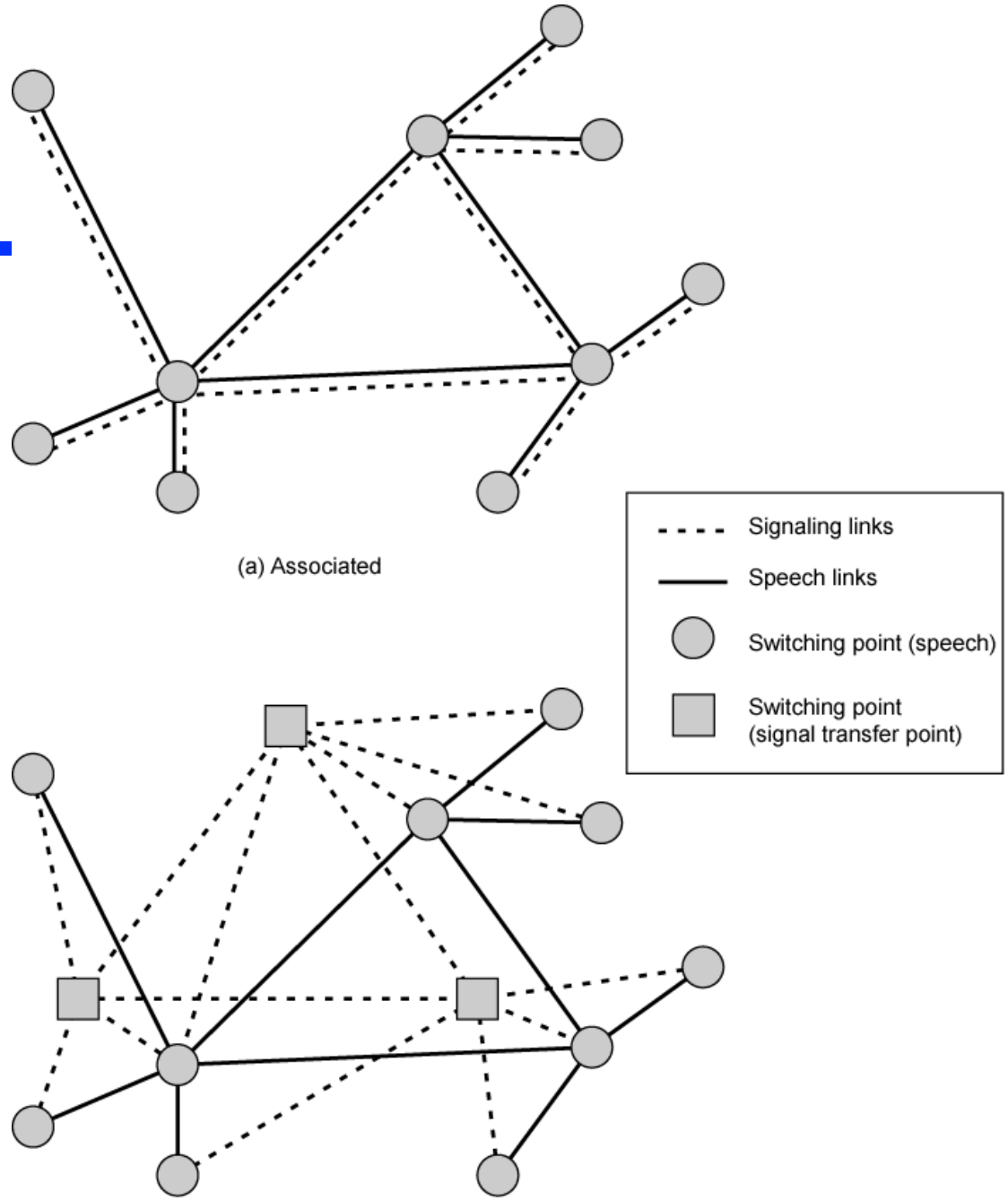

(a) Associated

(b) Disassociated

Signaling System Number 7

- SS7 is an open-ended common channel signaling standard
- Common channel signaling scheme
  - Especially designed to be used in ISDN (Integrated Services Digital Network)
  - Optimized for 64kbps digital channel network
  - Call control, remote control, management and maintenance
  - Reliable means of transfer of info in sequence
  - Will operate over analog and below 64kpbs
  - Point to point terrestrial and satellite links

SS7
Signaling Network Elements

- Signaling point (SP)
  - Any point in the network capable of handling SS7 control message
- Signal transfer point (STP)
  - A signaling point capable of routing control messages
- Control plane
  - Responsible for establishing and managing connections
- Information plane
  - Once a connection is set up, info is transferred in the information plane

Transfer Points

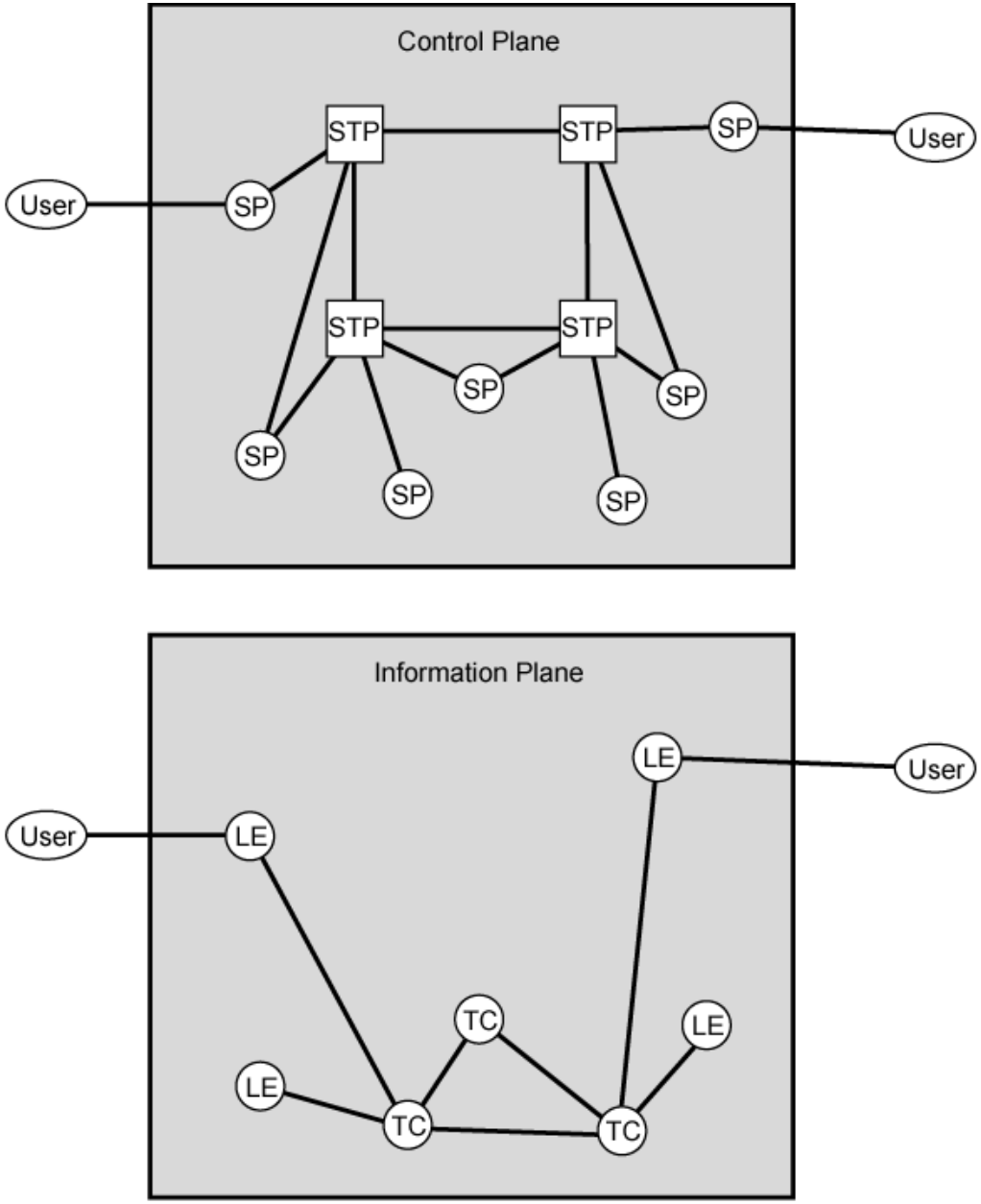

STP = Signaling transfer point
SP = Signaling point
TC = Transit center
LE = Local Exchange

Signaling Network Structures

- STP capacities determine
  - Number of signaling links that can be handled
  - Message transfer time
  - Throughput capacity
- Network performance affected by
  - Number of SPs
  - Signaling delays
- Availability and reliability
  - Ability of network to provide services in the face of STP failures

Softswitch Architecture

- General purpose computer running software to make it a smart phone switch
- Lower costs
- Greater functionality
  - Packetizing of digitized voice data
  - Allowing voice over IP
- Most complex part of telephone network switch is software controlling call process
  - Call routing
  - Call processing logic
  - Typically running on proprietary processor
- Separate call processing from hardware function of switch
- Physical switching done by media gateway
- Call processing done by media gateway controller

Traditional Circuit Switching

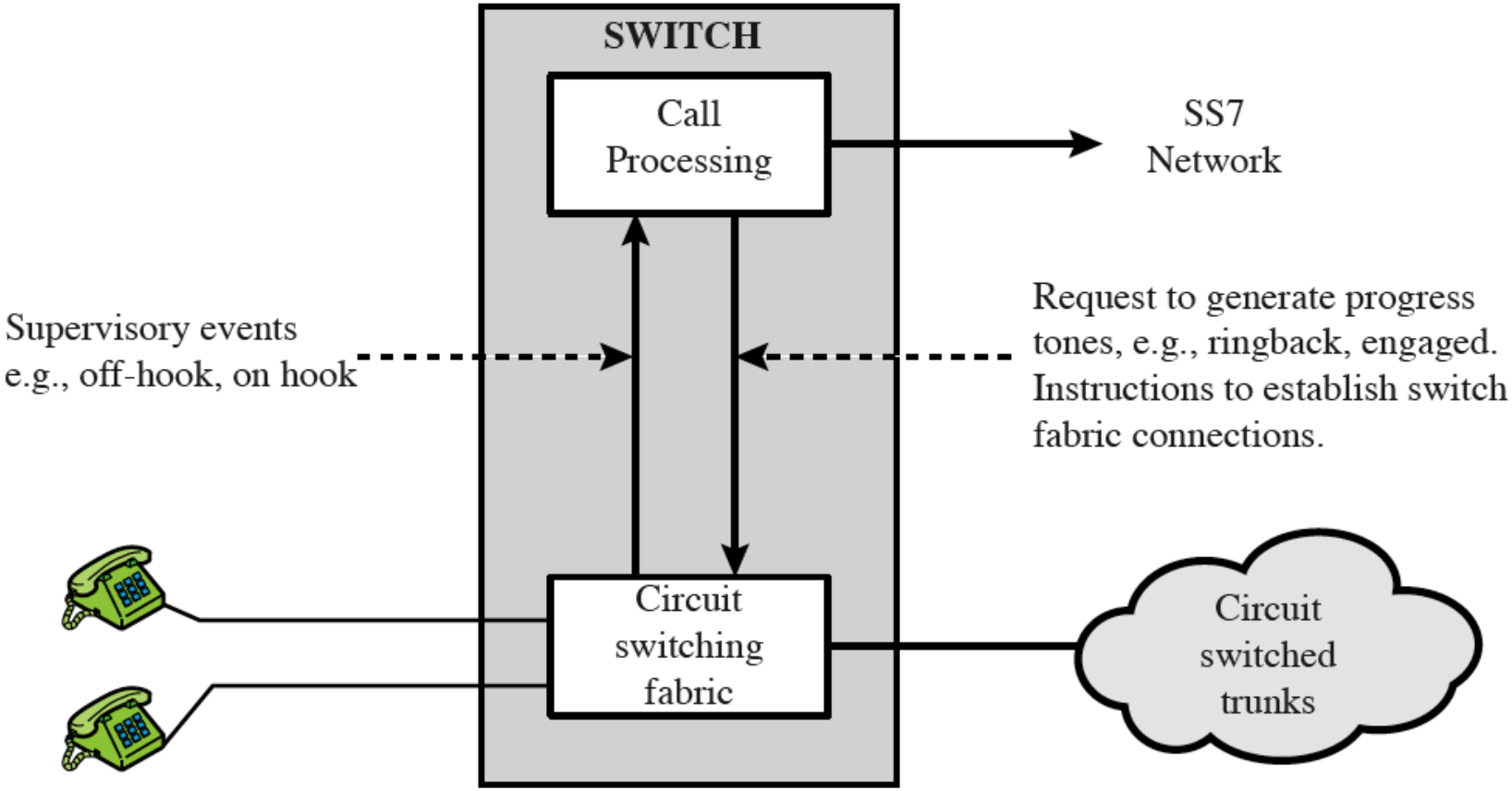

(a) Traditional circuit switching

Softswitch

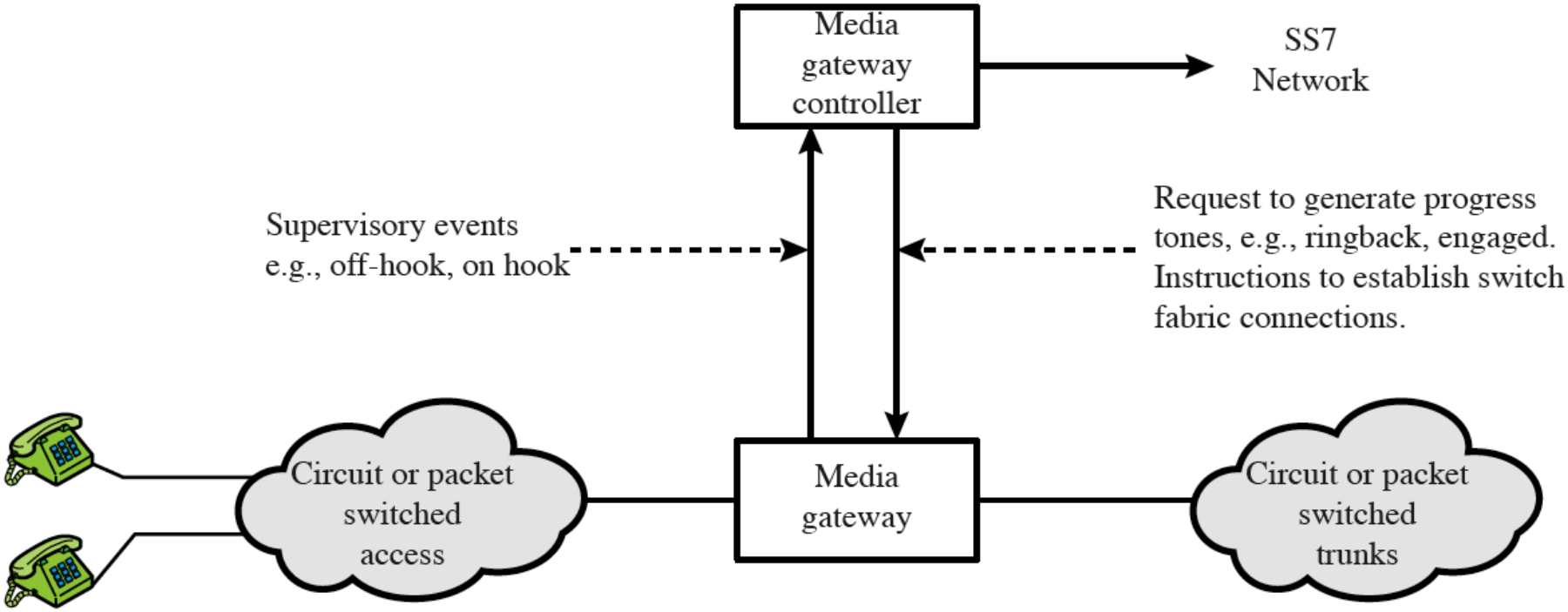

(b) Softswitch architecture

Packet Switching Principles

- Circuit switching designed for voice
  - Resources dedicated to a particular call
  - Much of the time a data connection is idle
  - Data rate is fixed
    - Both ends must operate at the same rate

Packet Switching: Basic Operation

- Data transmitted in small packets
  - Typically 1000 octets
  - Longer messages split into series of packets
  - Each packet contains a portion of user data plus some control info
- Control info
  - Routing (addressing) info
- Packets are received, stored briefly (buffered) and past on to the next node
  - Store and forward

Use of Packets

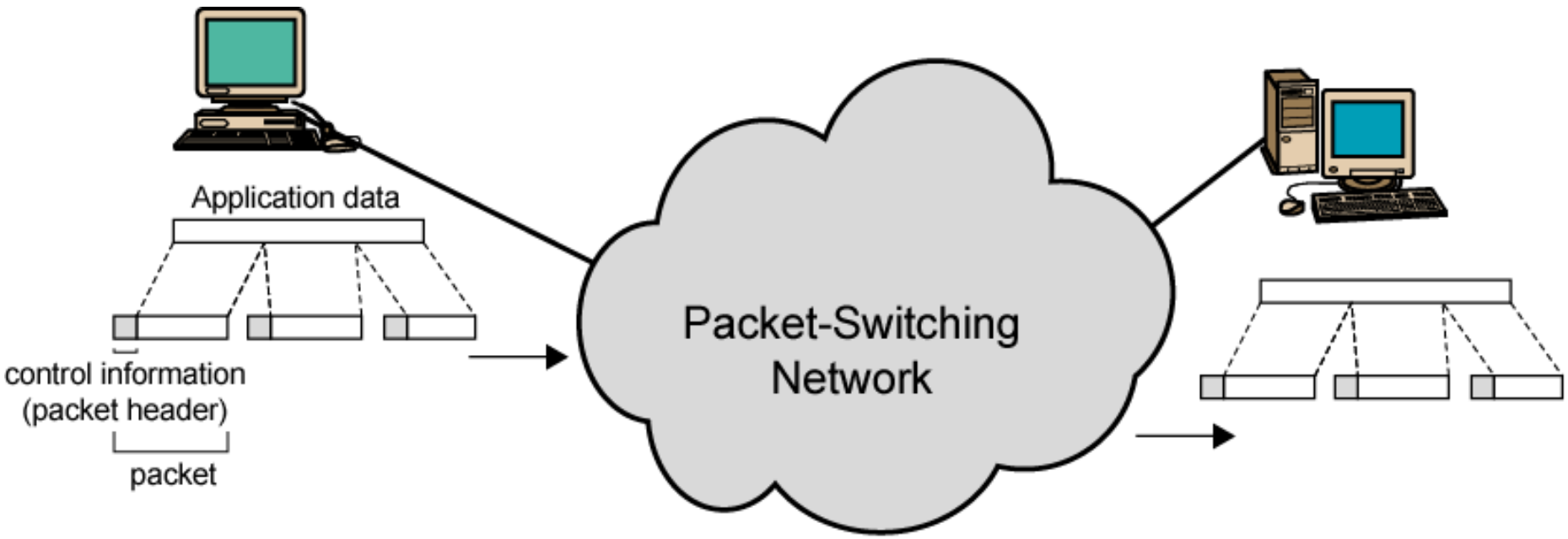

Advantages

- Line efficiency
  - Single node to node link can be shared by many packets over time
  - Packets queued and transmitted as fast as possible
- Data rate conversion
  - Each station connects to the local node at its own speed
  - Nodes buffer data if required to equalize rates
- Packets are accepted even when network is busy
  - Delivery may slow down
- Priorities can be used

Switching Technique

- Station breaks long message into packets
- Packets sent one at a time to the network
- Packets handled in two ways
  - Datagram
  - Virtual circuit

Datagram

- Each packet treated independently
- Packets can take any practical route
- Packets may arrive out of order
- Packets may go missing
- Up to receiver to re-order packets and recover from missing packets

Datagram Diagram

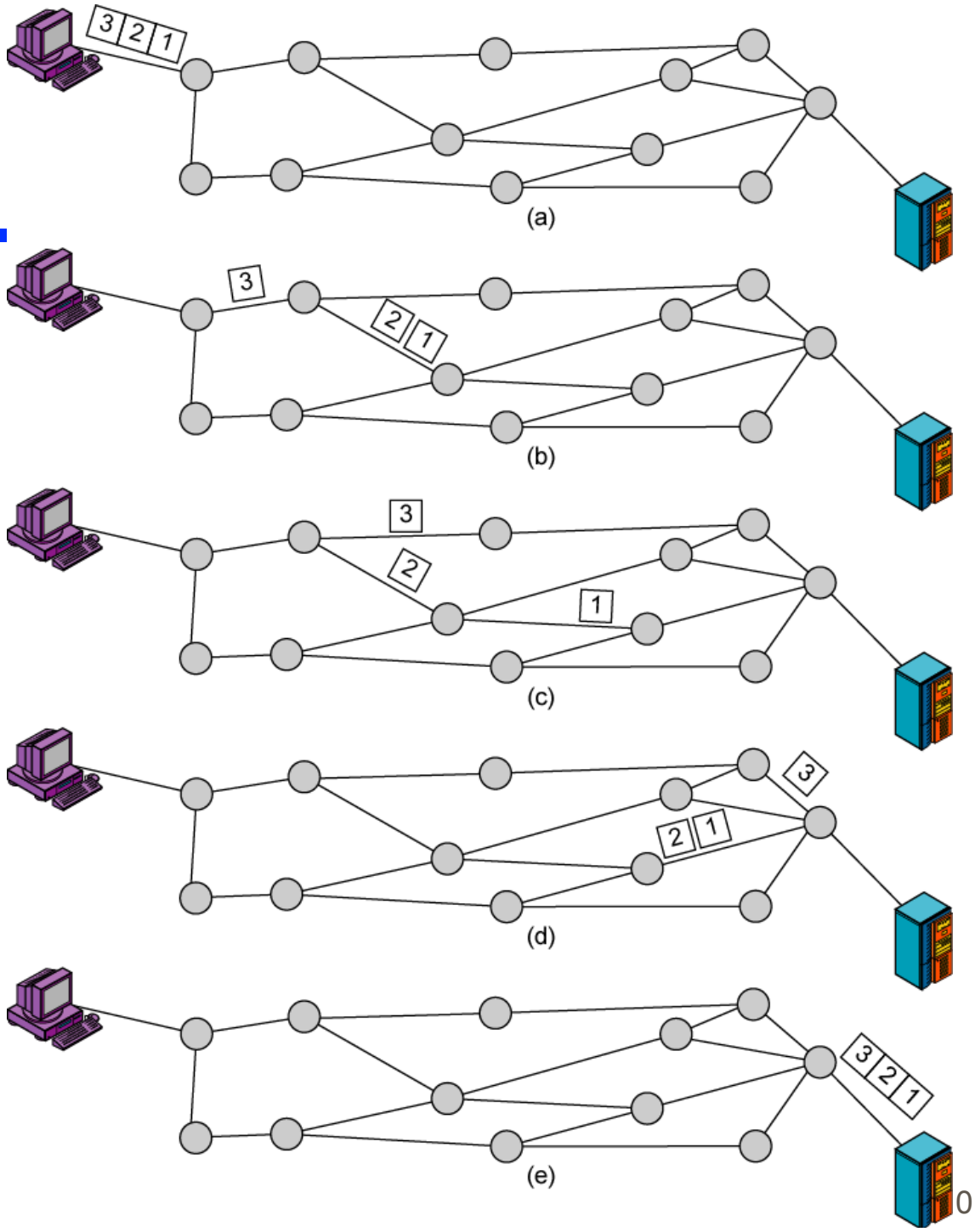

Virtual Circuit

- Preplanned route established before any packets sent
- Call request and call accept packets establish connection (handshake)
- Each packet contains a **virtual circuit identifier** instead of destination address
- No routing decisions required for each packet
- Clear request to drop circuit
- Not a dedicated path

Virtual Circuit Diagram

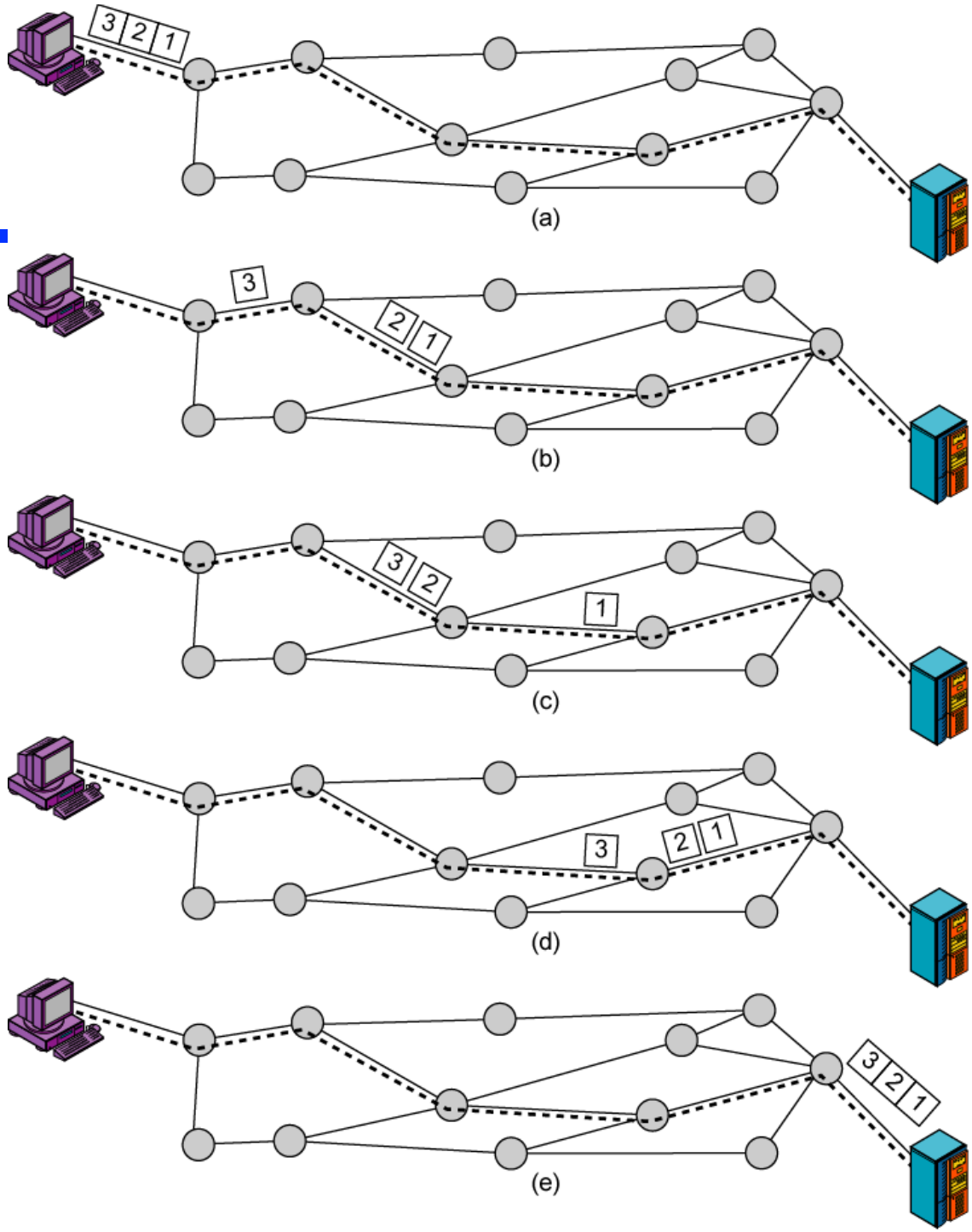

Virtual Circuits vs. Datagram

- Virtual circuits
  - Network can provide sequencing and error control
  - Packets are forwarded more quickly
    - No routing decisions to make
  - Less reliable
    - Loss of a node looses all circuits through that node
- Datagram
  - No call setup phase
    - Better if few packets
  - More flexible
    - Routing can be used to avoid congested parts of the network

Packet Size

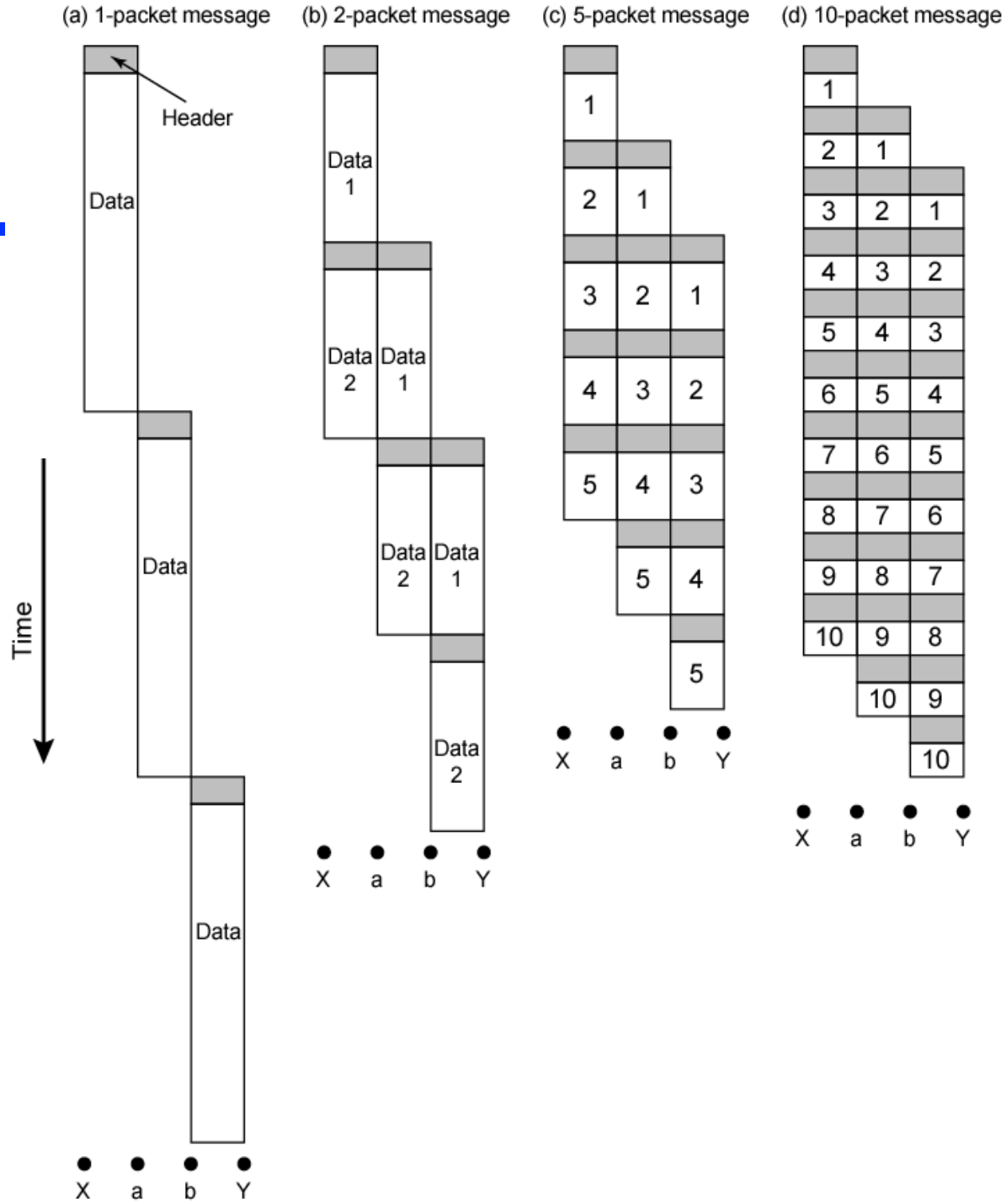
(a) 1-packet message
(b) 2-packet message
(c) 5-packet message
(d) 10-packet message
Header
Data
Time
X a b Y

Circuit vs Packet Switching

- Performance
  - Propagation delay
  - Transmission time
  - Node delay

Event Timing

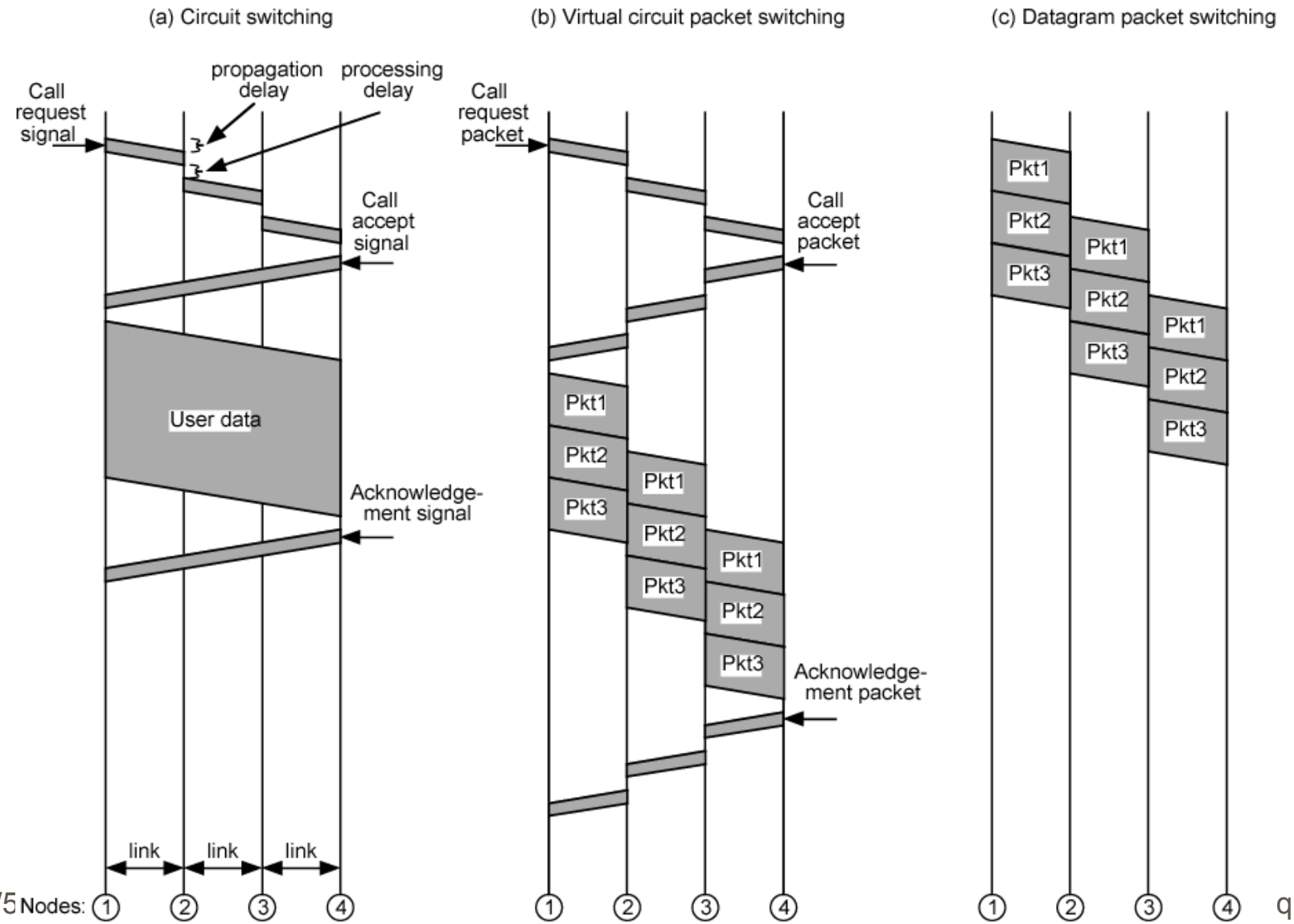

X.25

- We will only briefly cover this as an overview

X.25

- 1976
- Interface between host and packet switched network
- Almost universal on packet switched networks and packet switching in ISDN
- Defines three layers
  - Physical
  - Link
  - Packet

X.25 - Physical

- Interface between attached station and link to node
- Data terminal equipment DTE (user equipment)
- Data circuit terminating equipment DCE (node)
- Uses physical layer specification X.21
- Reliable transfer across physical link
- Sequence of frames

X.25 - Link

- Link Access Protocol Balanced (LAPB)
  - —Subset of HDLC
  - —see chapter 7

X.25 - Packet

- External virtual circuits
- Logical connections (virtual circuits) between subscribers

X.25 Use of Virtual Circuits

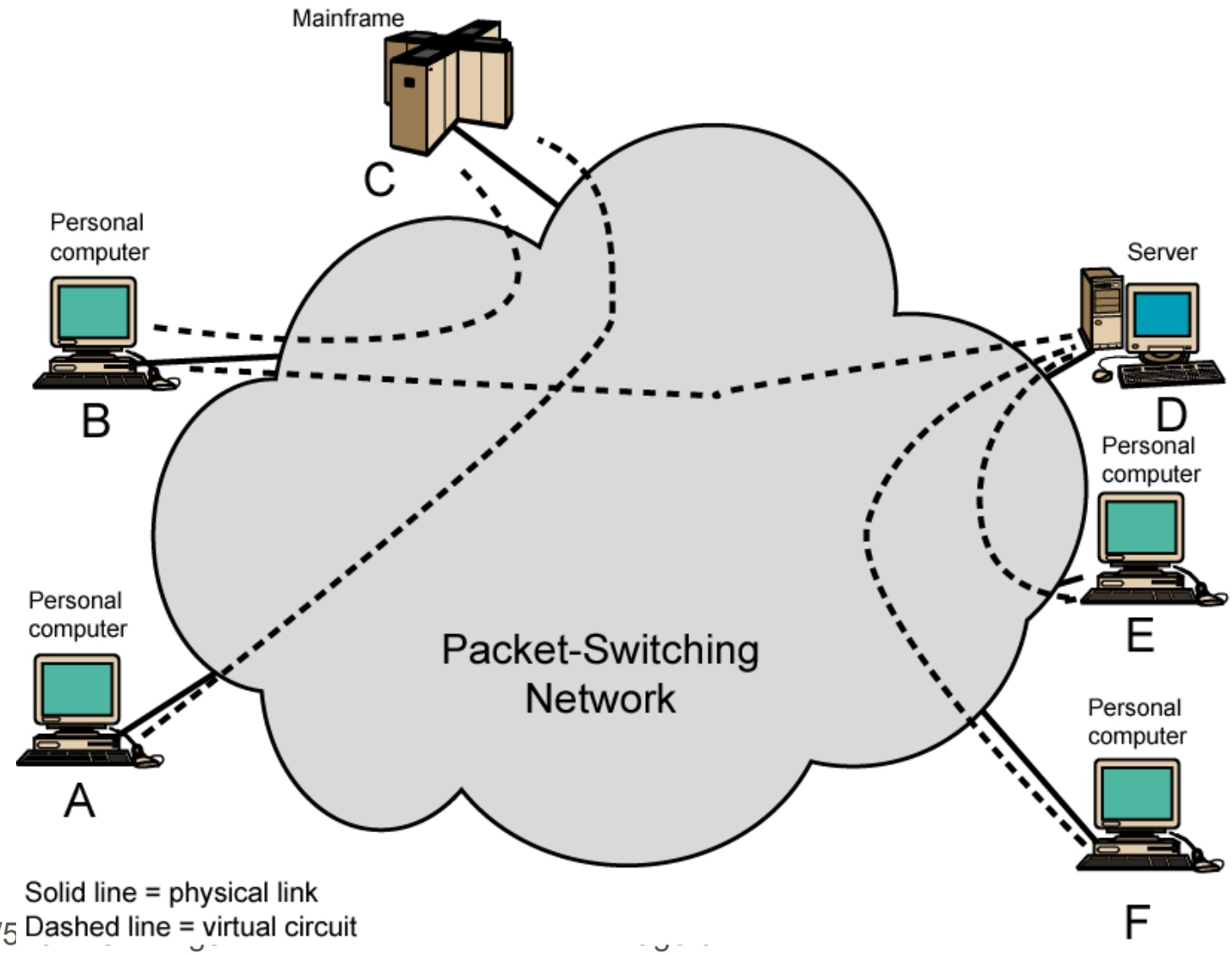

Virtual Circuit Service

- Logical connection between two stations
  - External virtual circuit
- Specific preplanned route through network
  - Internal virtual circuit
- Typically one to one relationship between external and internal virtual circuits
- Can employ X.25 with datagram style network
- External virtual circuits require logical channel
  - All data considered part of stream

X.25 Levels

- User data passes to X.25 level 3
- X.25 appends control information
  - Header
  - Identifies virtual circuit
  - Provides sequence numbers for flow and error control
- X.25 packet passed down to LAPB entity
  - recall LAPB = Link Access Procedure Balanced
- LAPB appends further control information

User Data and X.25 Protocol Control Information

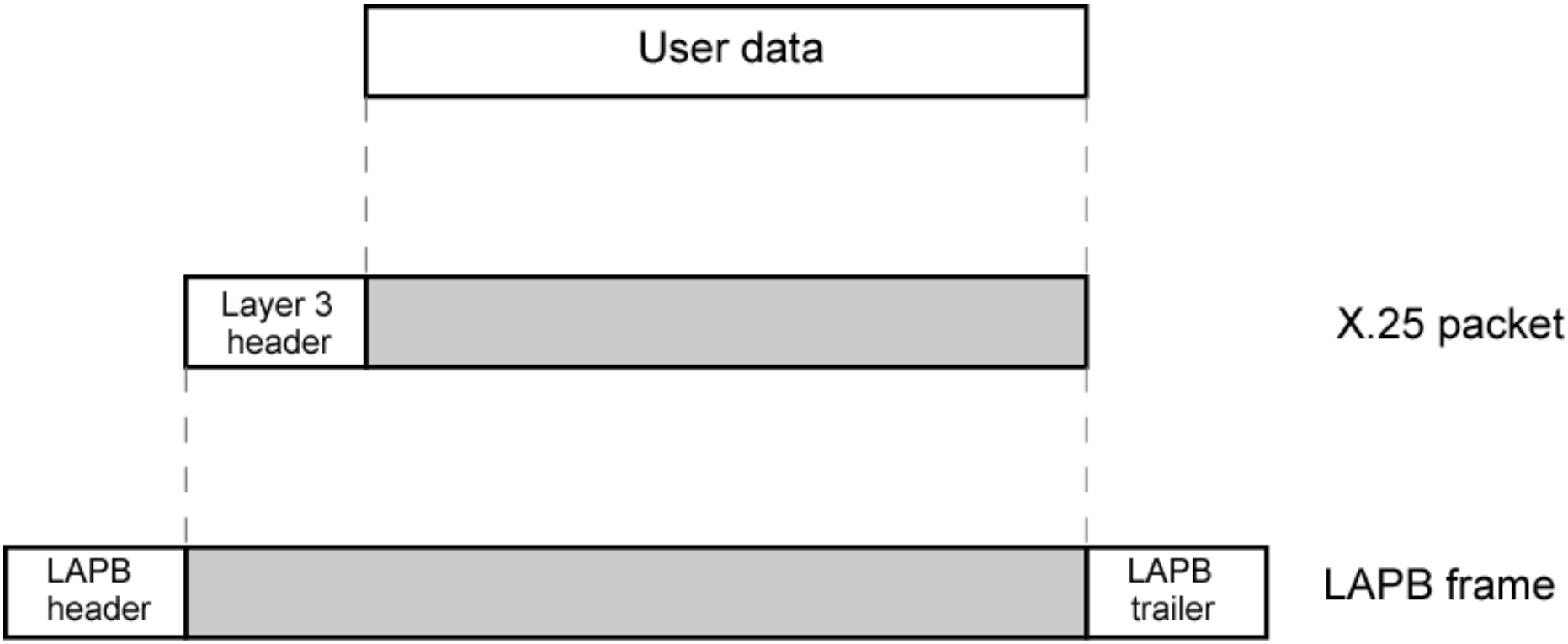

Frame Relay

- Designed to be more efficient than X.25
- Developed before ATM
- Larger installed base than ATM
- ATM now of more interest on high speed networks

Frame Relay Background - X.25

- Call control packets, in band signaling
- Multiplexing of virtual circuits at layer 3
- Layer 2 and 3 include flow and error control
- Considerable overhead
- Not appropriate for modern digital systems with high reliability

Frame Relay - Differences

- Call control carried in separate logical connection
- Multiplexing and switching at layer 2
  - Eliminates one layer of processing
- No hop by hop error or flow control
- End to end flow and error control (if used) are done by higher layer
- Single user data frame sent from source to destination and ACK (from higher layer) sent back

Advantages and Disadvantages

- Lost link by link error and flow control
  - Increased reliability makes this less of a problem
- Streamlined communications process
  - Lower delay
  - Higher throughput
- ITU-T recommend frame relay above 2Mbps

Protocol Architecture

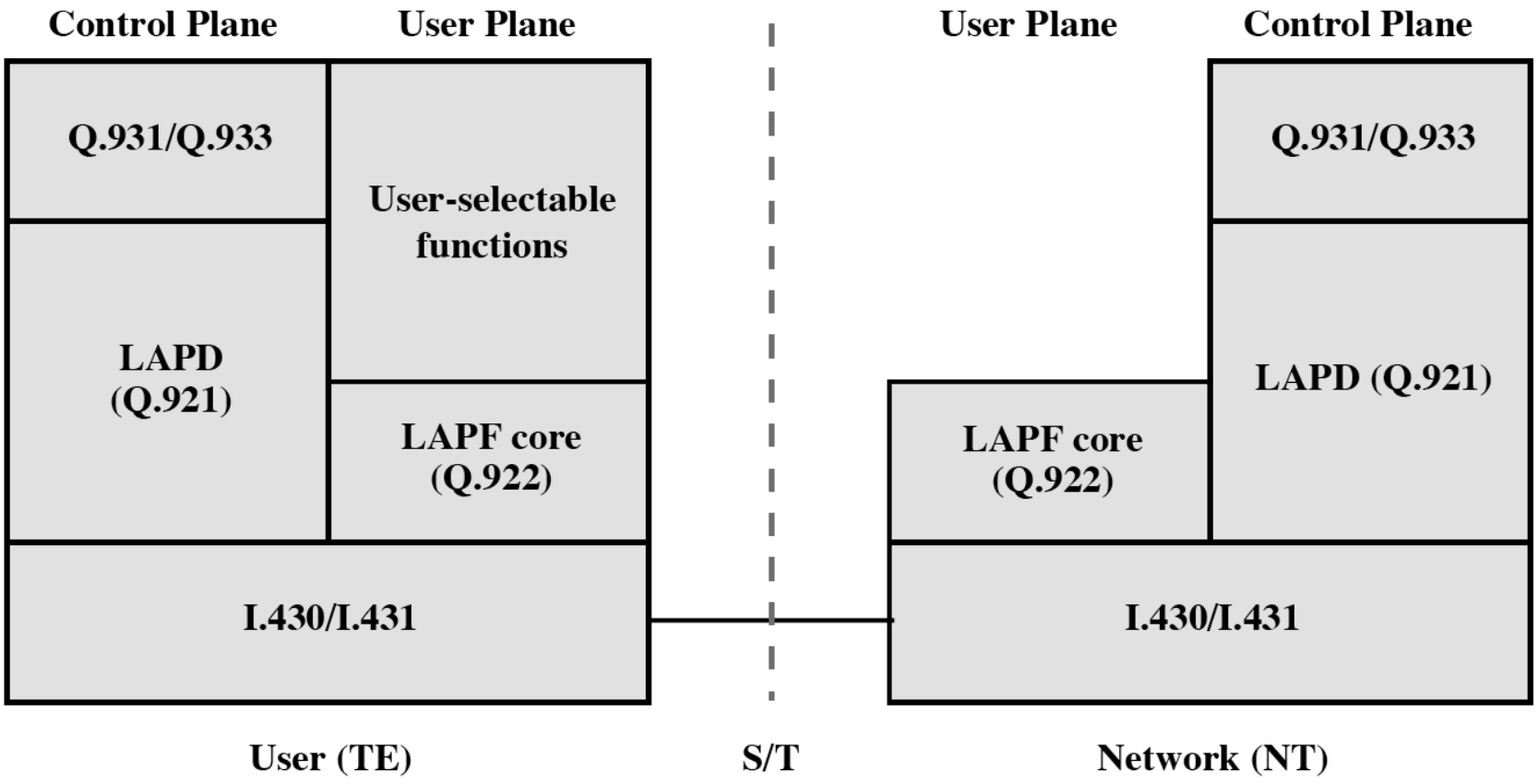

Figure 10.18 Frame Relay User-Network Interface Protocol Architecture

Control Plane

- Between subscriber and network
- Separate logical channel used
  - Similar to common channel signaling for circuit switching services
- Data link layer
  - LAPD (Q.921)
  - Reliable data link control
  - Error and flow control
  - Between user (TE) and network (NT)
  - Used for exchange of Q.933 control signal messages

User Plane

- End to end functionality
- Transfer of info between ends
- LAPF (Link Access Procedure for Frame Mode Bearer Services) Q.922
  - Frame delimiting, alignment and transparency
  - Frame mux and demux using addressing field
  - Ensure frame is integral number of octets (zero bit insertion/extraction)
  - Ensure frame is neither too long nor short
  - Detection of transmission errors
  - Congestion control functions

User Data Transfer

- One frame type
  - User data
  - No control frame
- No inband signaling
- No sequence numbers
  - No flow nor error control

Summary

- circuit verses packet switching network approaches
- X.25
- frame relay